WALRUS

PUMPS CATALOGUE

IE3-IE4
High Efficiency Motor

Better life through innovation

Contents

TPH 2T	5
TPH 4T	7
TPH 8T	9
TPH 12T	11
TPM	13
TPH 25T	15
TPH 50T	17

TPH Series Multistage Centrifugal Pump

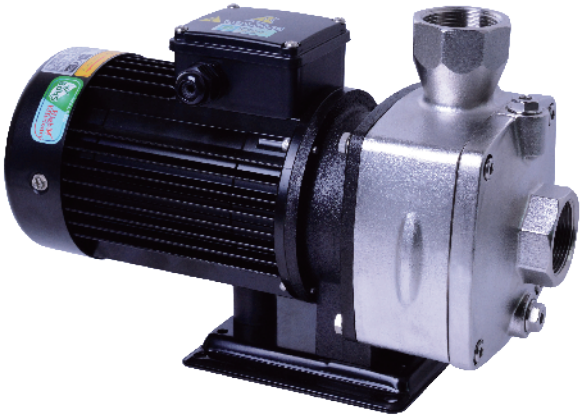

50Hz

Power: 0.37 - 3.4 kW

Head: Up to 57M

Flow: Up to 240 L/min

60Hz

Power: 0.37 - 3.7 kW

Head: Up to 79M

Flow: Up to 280 L/min

Outlet: 1" - 1½"

Inlet: 1" - 1½"

Applications

The TPH Series is horizontal multistage centrifugal pump, suitable for clean water/liquid without abrasive matters. The applications are versatile, such as pressure boosting, transfer, circulation, and machinery.

- Industrial circulation system
- Washing/cleaning system
- Pressure booster system
- Water/liquid transfer
- Agricultural irrigation

Standard Mode

TPH 4T 2K

- Model type
- Nominal flow rate (m^3/hr)
- Nominal head (kg/cm^2)

Code **TPH 4T 2K S A H CH**

- Standard mode
- N: SUS 316 (2T/4T)
  S: SUS 304
- Air conditioning (IP 44)
- Insulation class: H.
- Insulation class: H. (2T/4T)
  Mechanical seal type: MGSV (Carbon + SiC + Viton)
  Water temperature : +4°C ~ +120°C
  Oil temperature : +0°C ~ +150°C

Operating Conditions

1. Ambient temperature: Max. +40°C
2. Liquid temperature range: +0°C ~ +90°C
3. Operating pressure: Max. 10 kg/cm^2
4. Inlet pressure: Max. 6 kg/cm^2

Pump Construction

Horizontal multistage centrifugal pump, non self-priming, co-axial pump/motor design, impellers mounted on extended motor shaft. Main working parts made by stainless steel.

Motor

Enclosure protection class: IP54
Insulation class: F.
Frequency range: 50 / 60 Hz
Nominal speed: 2900 / 3500 rpm
Voltages code:

Code	PH	50Hz	60Hz
A6V*	3	200-230/342-415V	220-240/380-480V
A9V*	3	200-230/342-380V	220-240/380-440V
59V	3	200-230/342-380V	-

Optional : 50Hz, 60Hz models are available on request.
* The motor can be use in both 50/60 Hz.

TPH Series Multistage Centrifugal Pump

Performance curve (50Hz)

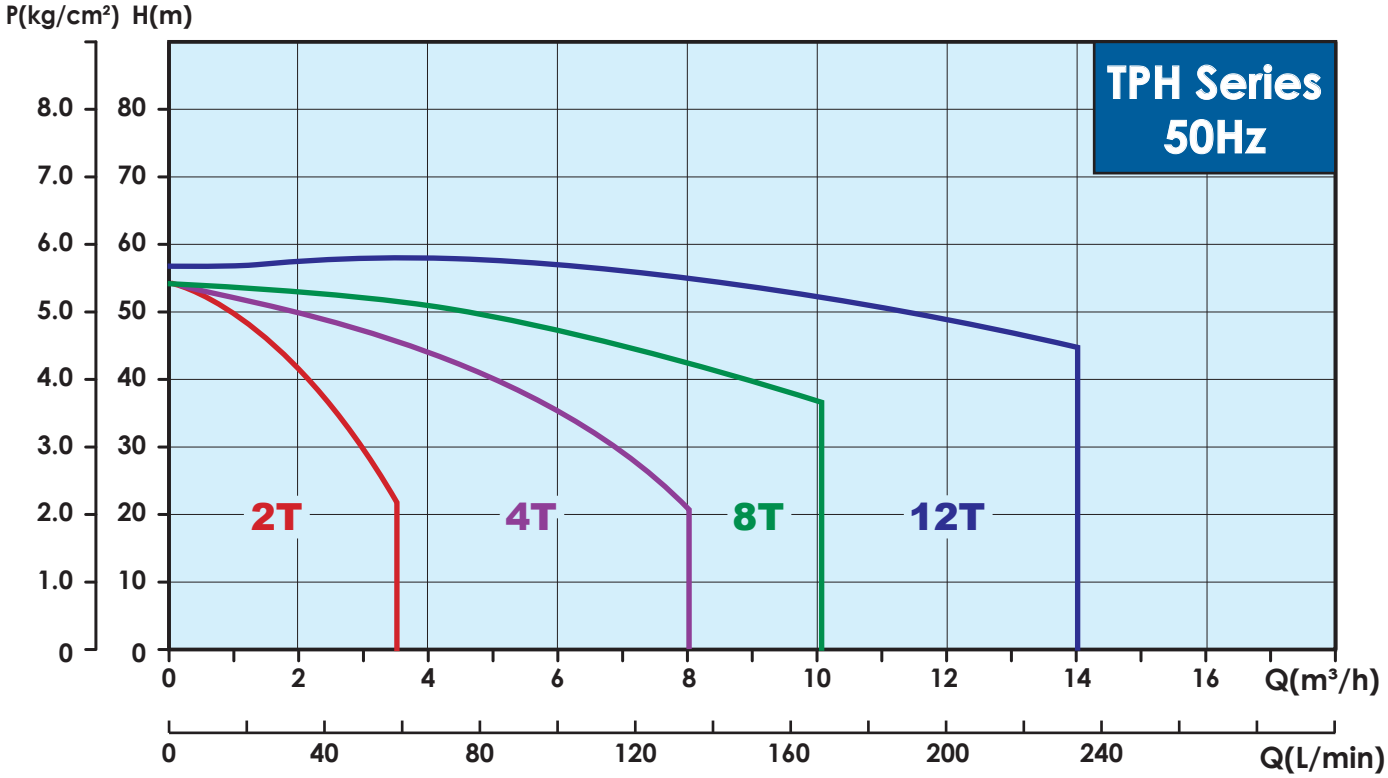

Performance curve (60Hz)

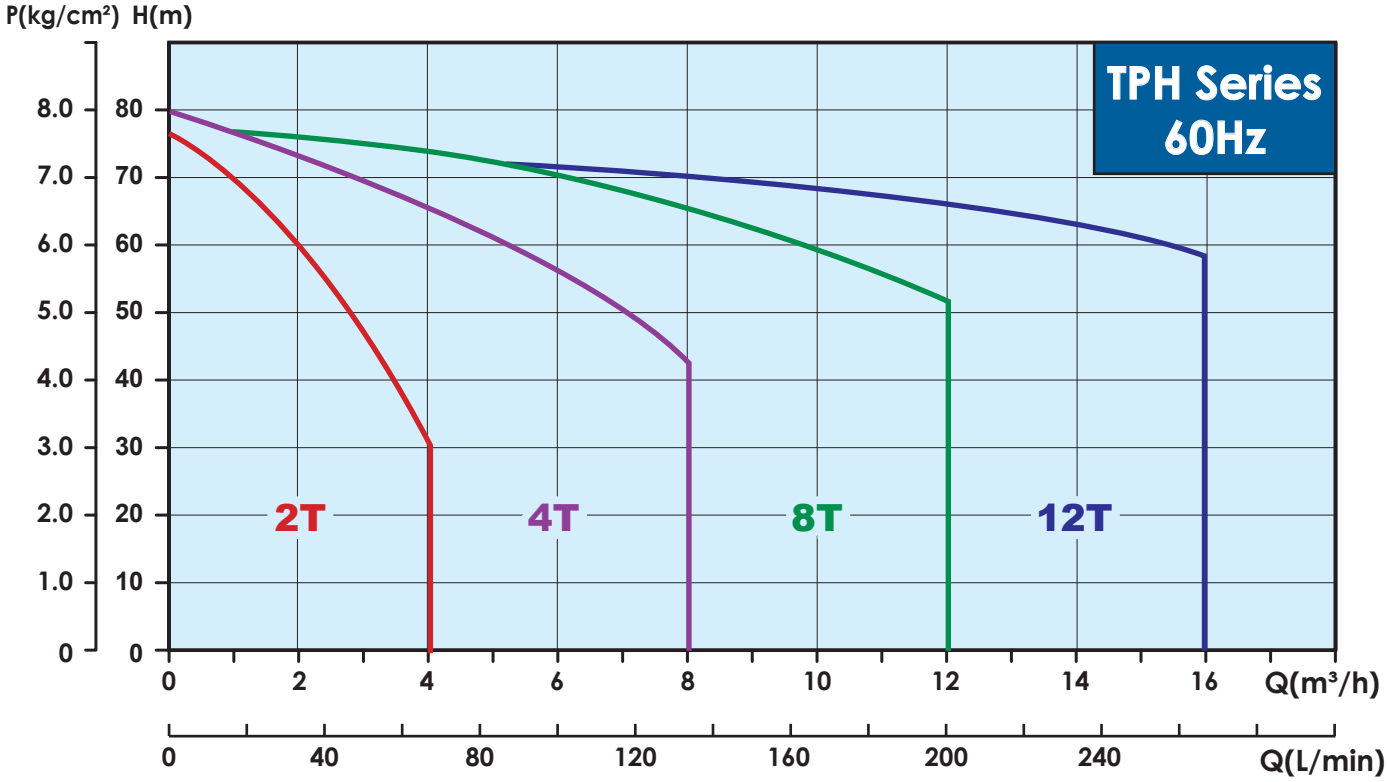

Sectional drawing

(TPH2/4T)

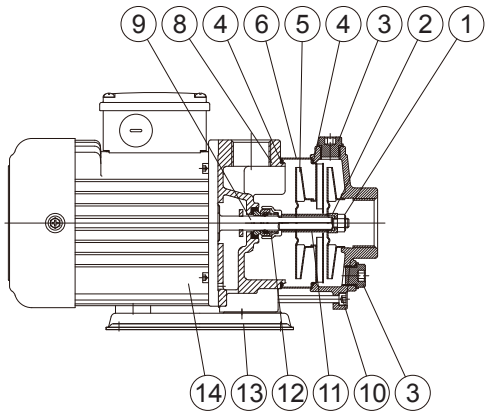

(TPH 8/12T)

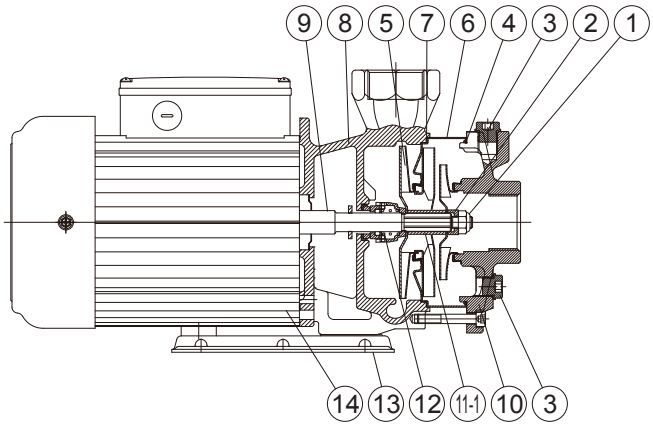

Materials

No.	Part name	Material	
		Standard	S series
1	Lock Nut	SUS 316	SUS 316
2	Sleeve(Shaft End)	SUS 316	SUS 316
3	Water Plug	FC 20	SUS 304
4	O Ring	HNBR	HNBR
5	Impeller	SUS 304	SUS 304
6	Intermediate Chamber	SUS 304	SUS 304
7	Gasket	Teflon	Teflon
8	Pump Casing	FC 20	SUS 304
9	Shaft	SUS 304	SUS 304
10	Suction Chamber	FC 20	SUS 304
11	Sleeve	SUS 304	SUS 304
11-1	Sleeve	SUS 316	SUS 316
12	Mechanical Seal	MGSH / HGSH	
13	Mounted Base	Coating Steel	
14	Motor Shell	Aluminum alloy	

SUS 304 may be replaced by SUS316 depended on stock availability.

Options on request

- Terminal box position adjustable
- Special mechanical seal

(TPH 2/4T)

Mechanical seal type	Material	
	Stationary Face/ Rotary Face	Cup Gasket & O Ring
MGSH MGSV MGSE	(G)Carbon/ (S)Silicium carbide	(H) HNBR (V) Viton (E) EPDM
MSSH MSSV MSSE	(S)Silicium carbide/ (S)Silicium carbide	

(TPH 8/12T)

Mechanical seal type	Material	
	Stationary Face/ Rotary Face	Cup Gasket & O Ring
HGSH HGSV HGSE	(G)Carbon/ (S)Silicium carbide	(H) HNBR (V) Viton (E) EPDM
HSSH HSSV HSSE	(S)Silicium carbide/ (S)Silicium carbide	

TPH 2T

Electrical data, 50/60Hz

Model	PH (Ø)	Voltage code	Cycle (Hz)	Volts (V)	Output Power (kW)	Ampere $I^{1/1}$(A)	Service Factor	Service Factor I_{max}(A)
TPH 2T 1K	3	A6V	50	200-230/342-415V	0.37	1.8-1.9/1.1-1.2	1.2	2.1-2.1/1.2-1.3
			60	220-240/380-480V		1.7-1.7/1.1-1.1	1.6	2.4-2.3/1.4-1.3
TPH 2T 2K	3	A6V	50	200-230/342-415V	0.37	1.8-1.9/1.1-1.2	1.2	2.1-2.1/1.2-1.3
			60	220-240/380-480V		1.7-1.7/1.1-1.1	1.6	2.4-2.3/1.4-1.3
TPH 2T 3K	3	A6V	50	200-230/342-415V	0.37	1.8-1.9/1.1-1.2	1.2	2.1-2.1/1.2-1.3
			60	220-240/380-480V		1.7-1.7/1.1-1.1	1.6	2.4-2.3/1.4-1.3
TPH 2T 4K	3	A6V	50	200-230/342-415V	0.55	2.5-2.4/1.5-1.4	1.1	2.7-2.6/1.6-1.5
			60	220-240/380-480V		2.3-2.2/1.3-1.3	1.5	3.2-3.0/1.9-1.6
TPH 2T 5K	3	A6V	50	200-230/342-415V	0.75	3.5-3.6/2.0-2.2	1.1	3.8-3.8/2.2-2.3
			60	220-240/380-480V		3.1-3.1/1.8-1.9	1.4	4.1-3.9/2.3-2.3
TPH 2T 6K	3	A6V	50	200-230/342-415V	0.75	3.5-3.6/2.0-2.2	1.1	3.8-3.8/2.2-2.3
			60	220-240/380-480V		3.1-3.1/1.8-1.9	1.4	4.1-3.9/2.3-2.3

Dimensions (mm)

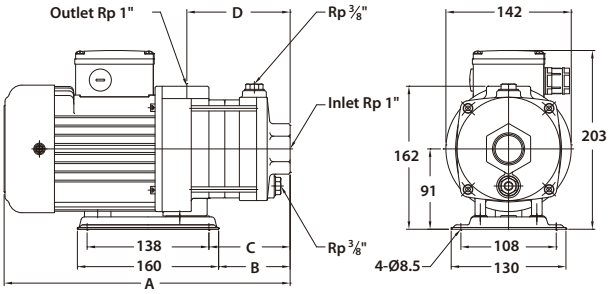

Model	Cycle (Hz)	A(mm)	B(mm)	C(mm)	D(mm)	N.W.(kg)	
TPH 2T 1K	50/60	306	63	74	99	11.7	36 pcs
TPH 2T 2K	50/60	306	63	74	99	11.8	
TPH 2T 3K	50/60	324	81	92	117	11.9	
TPH 2T 4K	50/60	382	99	110	135	12.0	
TPH 2T 5K	50/60	400	117	128	153	13.5	30 pcs
TPH 2T 6K	50/60	418	135	146	171	13.6	

Performance curve (50Hz)

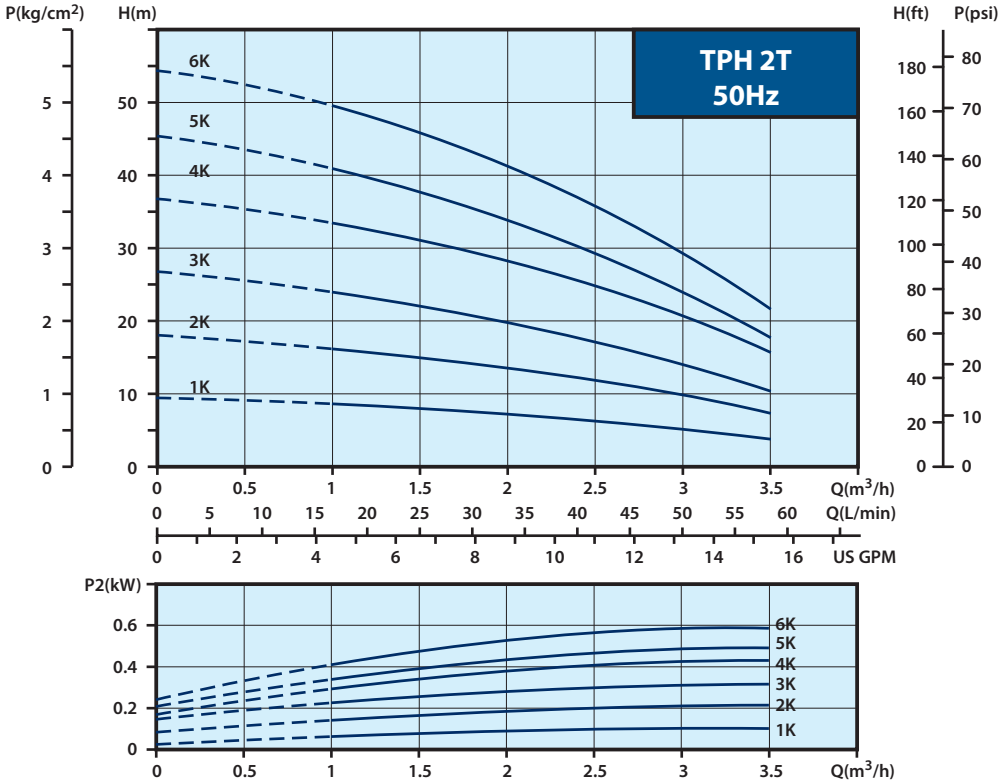

Performance curve (60Hz)

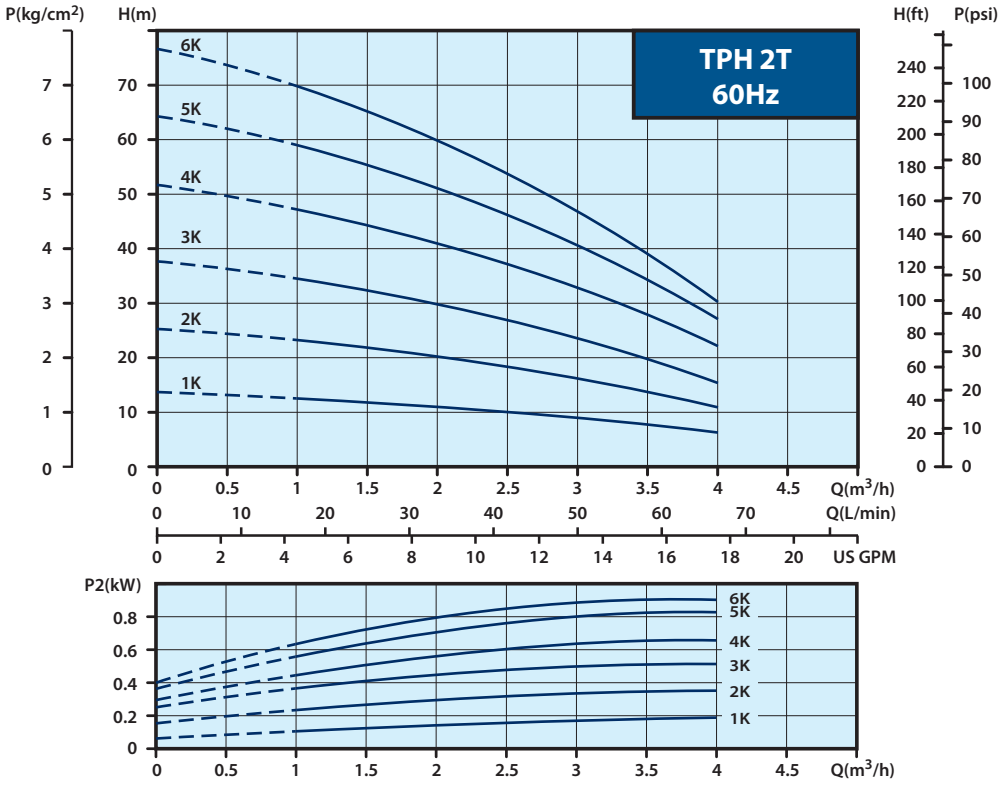

TPH 4T

Electrical data, 50/60Hz

Model	PH (Ø)	Voltage code	Cycle (Hz)	Volts (V)	Output Power (kW)	Ampere $I^{1/1}$(A)	Service Factor	Service Factor I_{max}(A)
TPH4T2K	3	A6V	50	200-230/342-415V	0.55	2.5-2.4/1.5-1.4	1.1	2.7-2.6/1.6-1.5
			60	220-240/380-480V		2.3-2.2/1.3-1.3	1.5	3.2-3.0/1.9-1.6
TPH4T3K	3	A6V	50	200-230/342-415V	0.75	3.5-3.6/2.0-2.2	1.1	3.8-3.8/2.2-2.3
			60	220-240/380-480V		3.1-3.1/1.8-1.9	1.4	4.1-3.9/2.3-2.3
TPH4T4K	3	A6V	50	200-230/342-415V	1.1	5.2-5.4/3.1-3.4	1.1	5.5-5.7/3.3-3.5
			60	220-240/380-480V		4.6-4.6/2.8-3.1	1.4	6.2-5.7/3.6-3.5
TPH4T5K	3	A6V	50	200-230/342-415V	1.5	6.7-6.7/3.8-4.0	1.1	7.3-7.1/4.1-4.2
			60	220-240/380-480V		6.0-5.9/3.5-3.6	1.4	8.1-7.6/4.7-4.2
TPH4T6K	3	A6V	50	200-230/342-415V	1.5	6.7-6.7/3.8-4.0	1.1	7.3-7.1/4.1-4.2
			60	220-240/380-480V		6.0-5.9/3.5-3.6	1.4	8.1-7.6/4.7-4.2

Dimensions (mm)

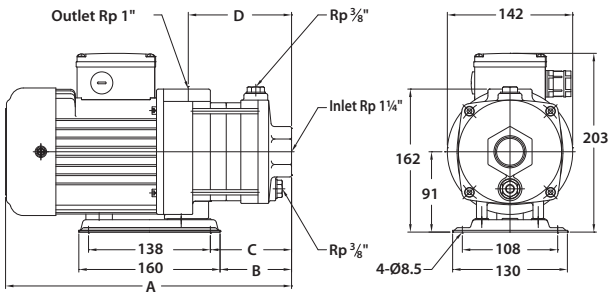

Model	Cycle (Hz)	A(mm)	B(mm)	C(mm)	D(mm)	N.W.(kg)	
TPH 4T 2K	50/60	355	72	83	108	11.7	36 pcs
TPH 4T 3K	50/60	382	99	110	135	13.3	30 pcs
TPH 4T 4K	50/60	439	126	137	162	14.1	
TPH 4T 5K	50/60	491	153	164	189	14.2	
TPH 4T 6K	50/60	519	180	191	216	15.1	

Performance curve (50Hz)

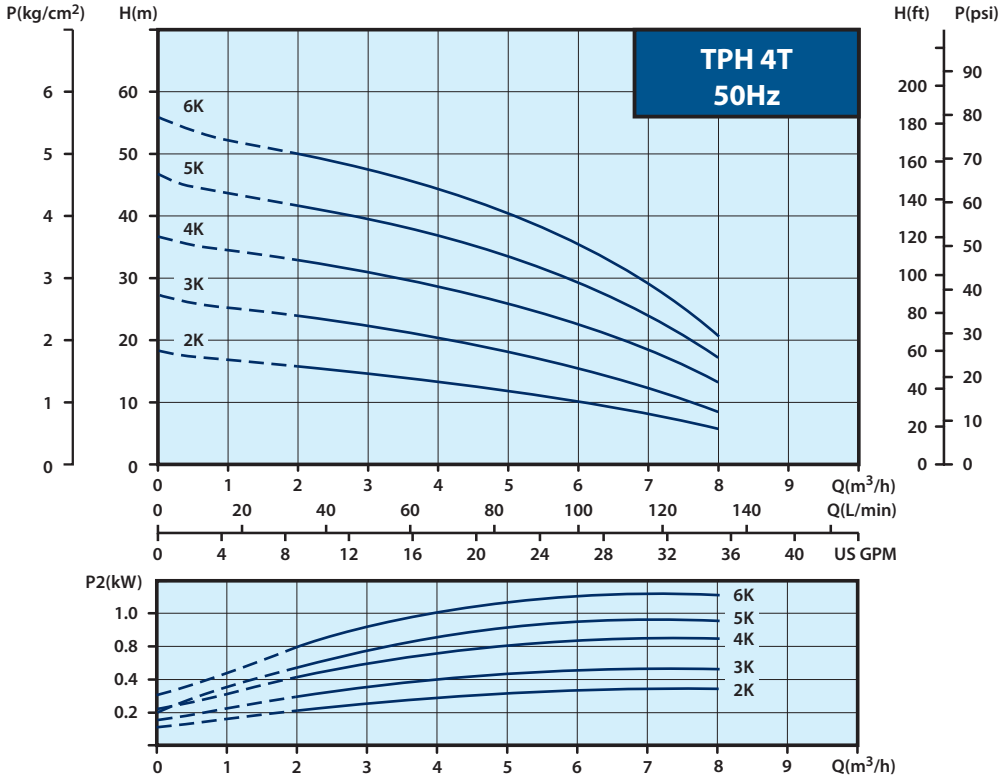

Performance curve (60Hz)

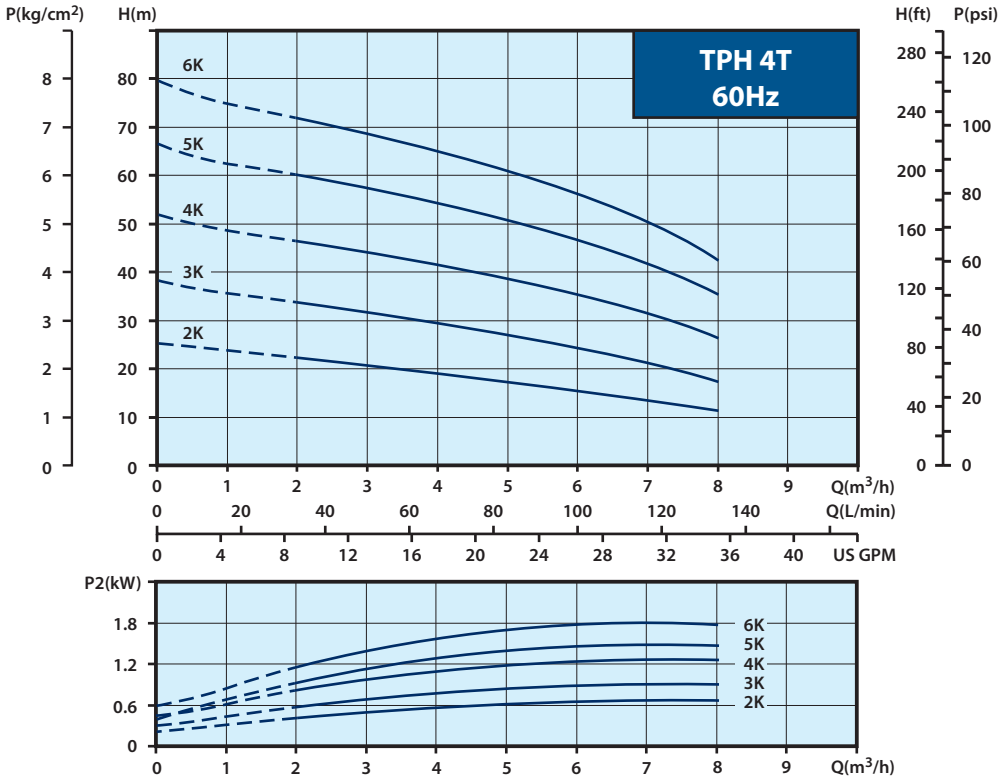

TPH 8T

Electrical data, 50/60Hz

Model	PH (Ø)	Voltage code	Cycle (Hz)	Volts (V)	Output Power (kW)	Ampere $I^{1/1}$(A)	Service Factor	Service Factor I_{max}(A)
TPH8T2K	3	A6V	50	200-230/342-415V	0.75	3.5-3.6/2.0-2.2	1.1	3.8-3.8/2.2-2.3
			60	220-240/380-480V		3.1-3.1/1.8-1.9	1.4	4.1-3.9/2.3-2.3
TPH8T2.5K	3	A6V	50	200-230/342-415V	1.1	5.2-5.4/3.1-3.4	1.1	5.5-5.7/3.3-3.5
			60	220-240/380-480V		4.6-4.6/2.8-3.1	1.4	6.2-5.7/3.6-3.5
TPH8T3K	3	A6V	50	200-230/342-415V	1.5	6.7-6.7/3.8-4.0	1.1	7.3-7.1/4.1-4.2
			60	220-240/380-480V		6.0-5.9/3.5-3.6	1.4	8.1-7.6/4.7-4.2
TPH8T4K	3	A9V	50	200-230/342-380V	2.2	9.5-10.5/5.5-5.6	1.1	10.2-10.9/5.9-5.9
			60	220-240/380-440V		8.6-8.4/4.9-5.0	1.5	12.1-11.2/6.9-6.4
TPH8T5K	3	A9V	50	200-230/342-380V	2.2	9.5-10.5/5.5-5.6	1.1	10.2-10.9/5.9-5.9
			60	220-240/380-440V		8.6-8.4/4.9-5.0	1.5	12.1-11.2/6.9-6.4
TPH8T6K	3	A9V	50	200-230/342-380V	3.0	12.2-13.1/7.1-7.1	1.1	13.4-14.0/7.9-7.8
			60	220-240/380-440V		11.2-10.7/6.4-6.3	1.3	14.5-13.3/8.3-7.6

Dimensions (mm)

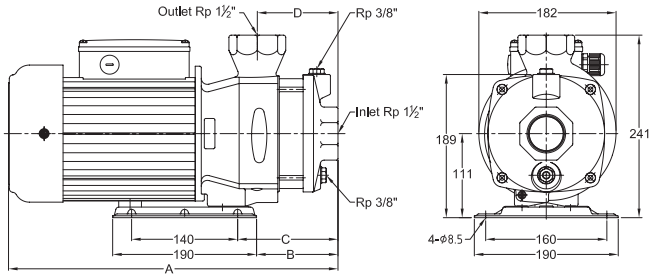

Model	Cycle (Hz)	A(mm)	B(mm)	C(mm)	D(mm)	N.W.(kg)	
TPH 8T 2K	50/60	377	77	101	75	18.8	24 pcs
TPH 8T 2.5 K	50/60	439	108	133	107	19.5	
TPH 8T 3K	50/60	464	108	133	107	20.0	
TPH 8T 4K	50/60	457	108	133	107	22.2	
TPH 8T 5K	50/60	491	142	167	141	25.4	
TPH 8T 6K	50/60	516	142	167	141	25.5	

Performance curve (50Hz)

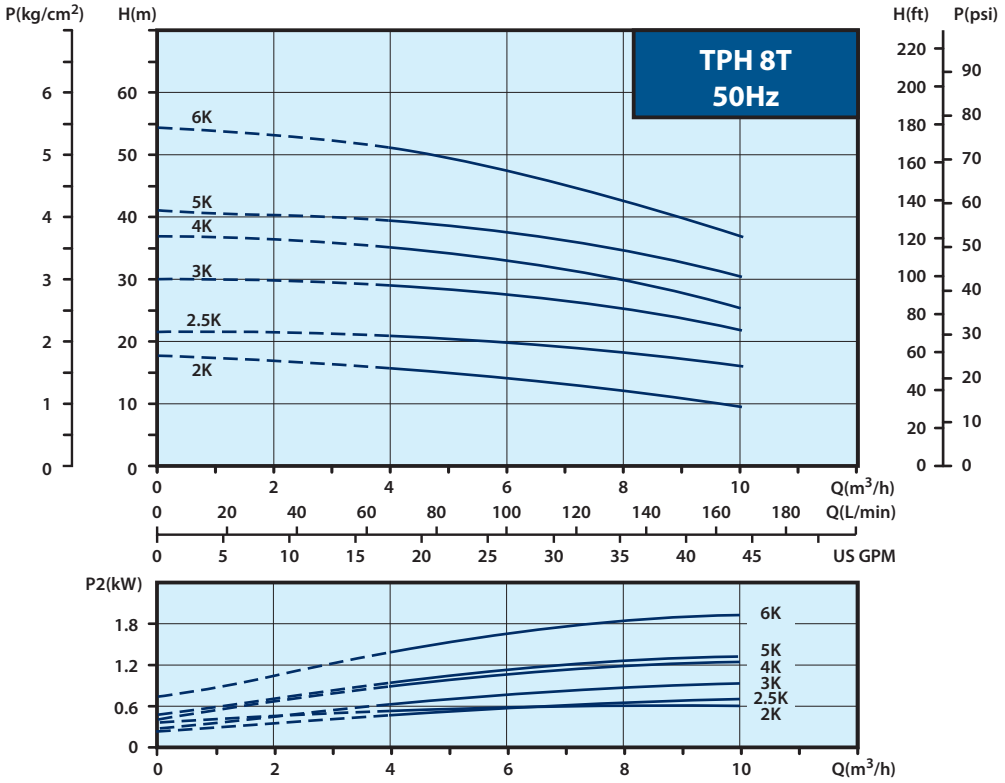

Performance curve (60Hz)

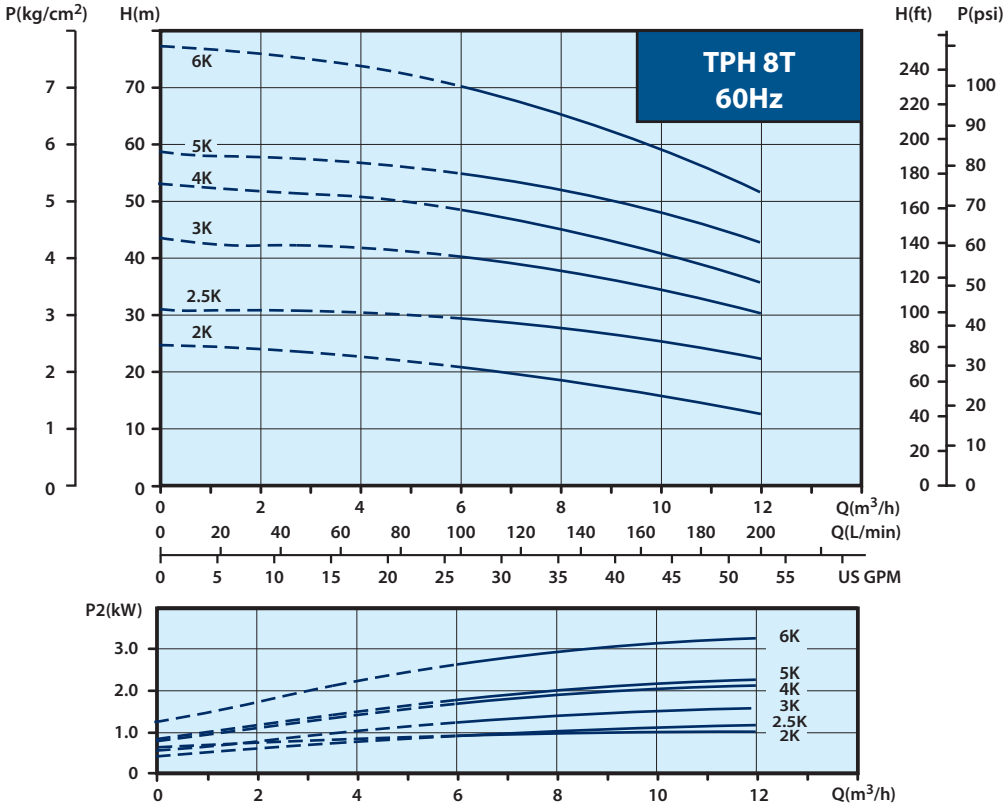

TPH 12T

Electrical data, 50/60Hz

Model	PH (Ø)	Voltage code	Cycle (Hz)	Volts (V)	Output Power (kW)	Ampere $I^{1/1}$(A)	Service Factor	Service Factor I_{max}(A)
TPH12T1K	3	A6V	50	200-230/342-415V	0.55	2.5-2.4/1.5-1.4	1.1	2.7-2.6/1.6-1.5
			60	220-240/380-480V		2.3-2.2/1.3-1.3	1.5	3.2-3.0/1.9-1.6
TPH12T2K	3	A6V	50	200-230/342-415V	1.5	6.7-6.7/3.8-4.0	1.1	7.3-7.1/4.1-4.2
			60	220-240/380-480V		6.0-5.9/3.5-3.6	1.4	8.1-7.6/4.7-4.2
TPH12T3K	3	A9V	50	200-230/342-380V	2.2	9.5-10.5/5.5-5.6	1.1	10.2-10.9/5.9-5.9
			60	220-240/380-440V		8.6-8.4/4.9-5.0	1.5	12.1-11.2/6.9-6.4
TPH12T4K	3	A9V	50	200-230/342-380V	3.0	12.2-13.1/7.1-7.1	1.1	13.4-14.0/7.9-7.8
			60	220-240/380-440V		11.2-10.7/6.4-6.3	1.3	14.5-13.3/8.3-7.6
TPH12T5K	3	A9V	50	200-230/342-380V	3.4	13.4-13.0/7.8-7.4	1.1	14.6-13.9/8.5-8.0
			60	220-240/380-440V	3.7	13.4-12.6/7.7-7.0	1.25	16.4-15.1/9.4-8.4
TPH12T6K	3	59V	50	200-230/342-380V	3.4	13.4-13.0/7.8-7.4	1.1	14.6-13.9/8.5-8.0

Dimensions (mm)

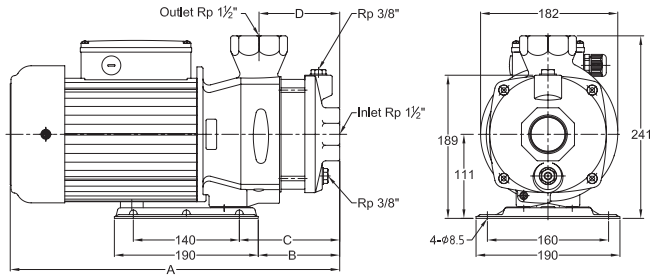

Model	Cycle (Hz)	A(mm)	B(mm)	C(mm)	D(mm)	N.W.(kg)	
TPH 12T 1K	50/60	377	76	101	75	17.6	24 pcs
TPH 12T 2K	50/60	432	76	101	75	20.0	
TPH 12T 3K	50/60	457	108	133	107	25.4	
TPH 12T 4K	50/60	482	108	133	107	28.0	
TPH 12T 5K	50/60	536	142	167	141	29.2	
TPH 12T 6K	50	536	142	167	141	29.2	

Performance curve (50Hz)

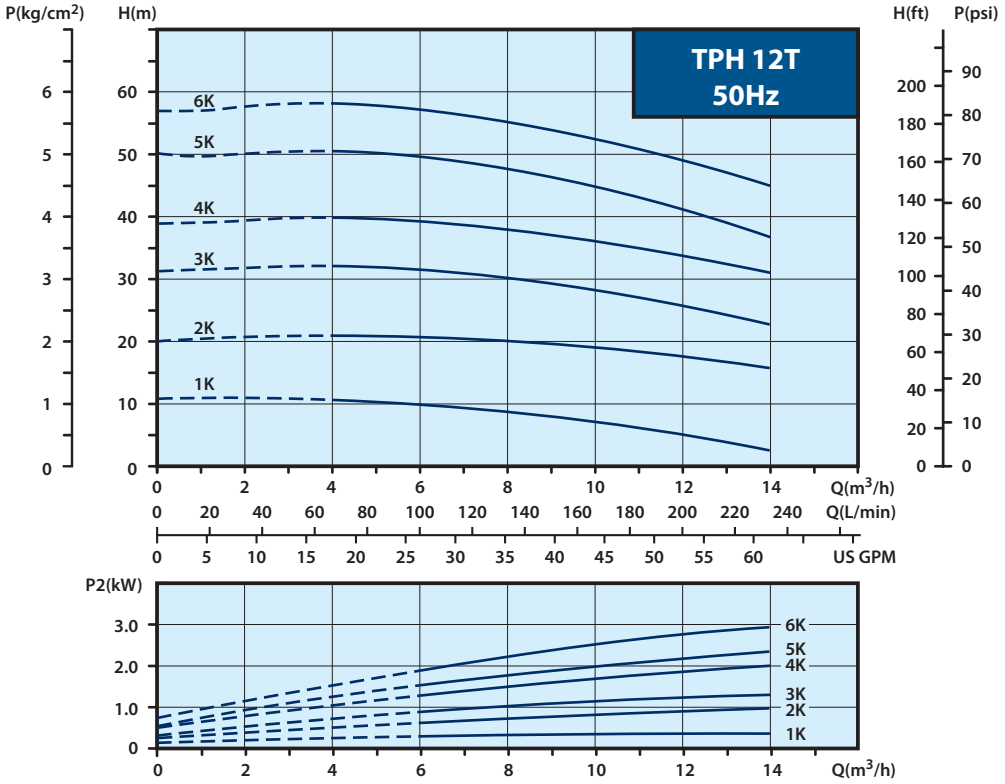

Performance curve (60Hz)

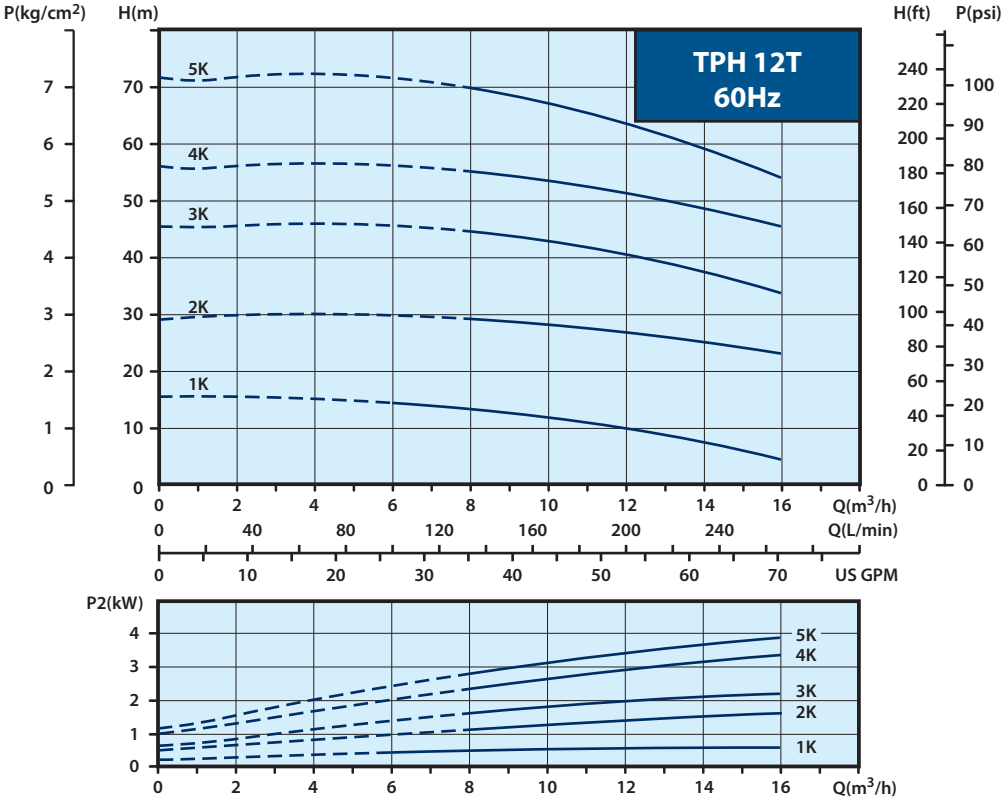

TPM Series Multistage Centrifugal Pump

50Hz

Power: 2.2 - 7.5 kW

Head: Up to 70 M

Flow: Up to 1200 L/min

60Hz

Power: 1.5 - 7.5 kW

Head: Up to 77 M

Flow: Up to 1500 L/min

Applications

Suitable for clean water/liquid without abrasive matters. The applications are versatile, such as pressure boosting, transfer, circulation, and machinery.

-Industrial circulation system

-Washing/cleaning system

-Pressure booster system

-Water/liquid transfer

-Agricultural irrigation

Pump Construction

The TPM Series is horizontal multistage centrifugal pump, non self-priming, co-axial pump/motor design, impellers mounted on extended motor shaft. Main working parts made by stainless steel.

Standard Mode

TPM 18T 2K

- Model type
- Nominal flow rate(m^3/h)
- Nominal head (kg/cm^2)

Code **TPM 18T 2K S F A H**

- Standard mode
- N: SUS 316 (25T/50T)
  S: SUS 304 (18T)
- Flange type (25T/50T)
- Air conditioning (IP 44)
- Insulation class: H.

Operating Conditions

1. Ambient temperature :Max. +40°C
2. Liquid temperature range:+0°C ~ +90°C
3. Operating pressure:Max. 10 kg/cm^2
4. Inlet pressure:Max. 6 kg/cm^2

Sectional drawing

(TPM 18T)

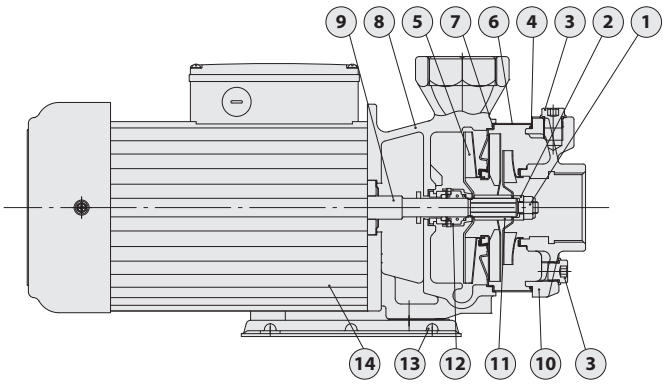

(TPM 25/50T)

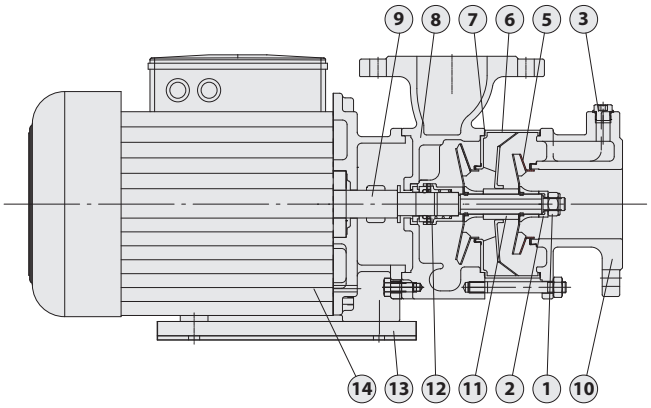

Materials

No.	Part name	Material		
		Standard	S series	N series
1	Lock Nut	SUS 316	SUS 316	SUS 316
2	Sleeve(Shaft End)	SUS 316	SUS 316	SUS 316
3	Water Plug	FC 20	SUS 304	SUS 316
4	O Ring	HNBR	HNBR	-
5	Impeller	SUS 304	SUS 304	SUS 316
6	Intermediate Chamber	SUS 304	SUS 304	SUS 316
7	Gasket	Teflon		
8	Pump Casing	FC 20	SUS 304	SUS 316
9	Shaft	SUS 304	SUS 304	SUS 316
10	Suction Chamber	FC 20	SUS 304	SUS 316
11	Sleeve	SUS 304	SUS 304	SUS 316
12	Mechanical seal	HGSH		
13	Mounted Base	Coating Steel		
14	Motor Shell	Aluminum alloy		

SUS 304 may be replaced by SUS316 depended on stock availability.

Options on request

- Special mechanical seal

Mechanical seal type	Material	
	Stationary Face / Rotary Face	Cup Gasket / O Ring
HGSH HGSV HGSE	(G)Carbon (S)Silicium Carbide	(H) HNBR (V) Viton (E) EPDM
HSSH HSSV HSSE	(S)Silicium Carbide (S)Silicium Carbide	

TPM 18T

Performance curve

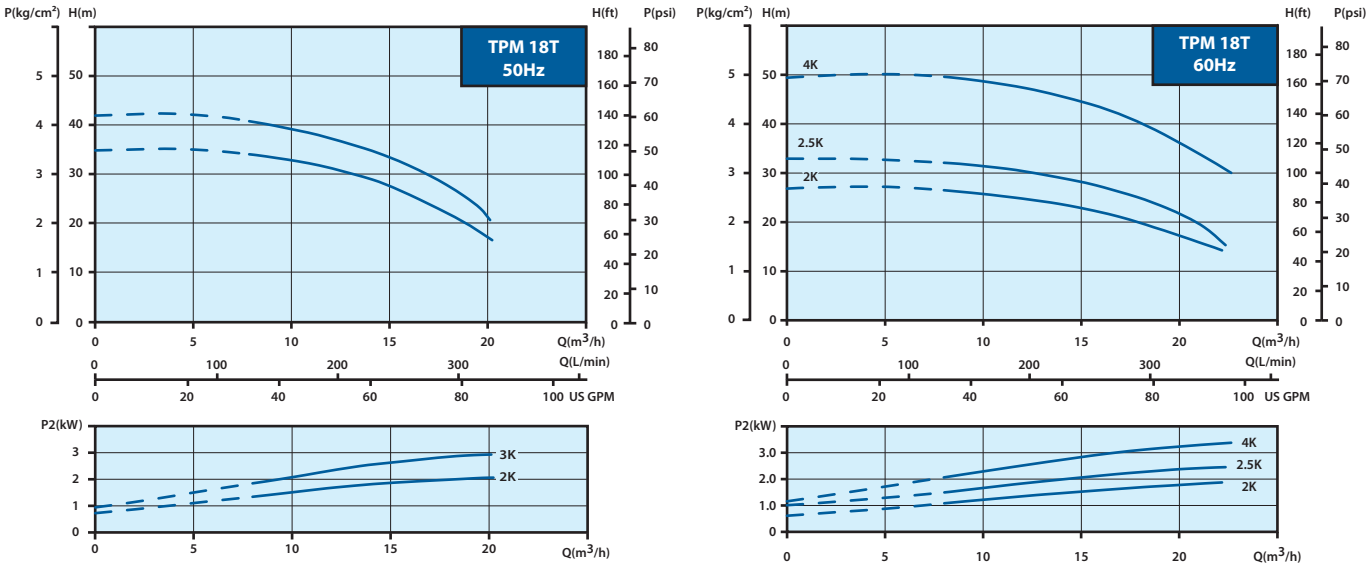

Electrical data

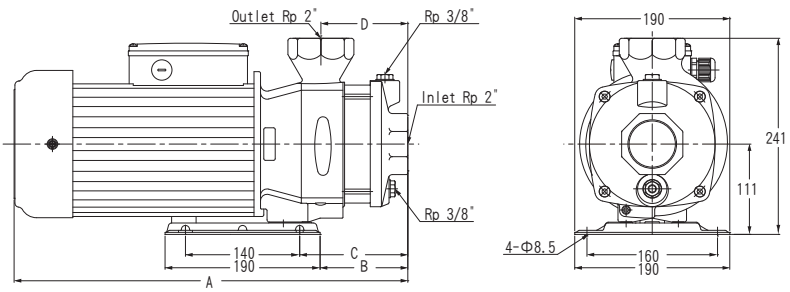

50Hz, 2900rpm, Motor Efficiency IE3

Model	PH (Ø)	Voltage code	Volts (V)	Output Power(kW)	Ampere I¹/₁(A)	Service Factor	Ampere Imax(A)	Dimensions				N.W. (kg)
								A(mm)	B(mm)	C(mm)	D(mm)	
TPM18T2K(S)	3	59V	200-230/342-380	2.2	9.5-10.5/5.5-5.6	1.1	10.2-10.9/5.9-5.9	458	108	133	107	31
TPM18T3K(S)	3	59V	200-230/342-380	3.0	12.2-13.1/7.1-7.1	1.1	13.4-14.0/7.9-7.8	483	108	133	107	34

60Hz, 3500rpm, Motor Efficiency IE3

Model	PH (Ø)	Voltage code	Volts (V)	Output Power(kW)	Ampere I¹/₁(A)	Service Factor	Ampere Imax(A)	Dimensions				N.W. (kg)
								A(mm)	B(mm)	C(mm)	D(mm)	
TPM18T2K(S)	3	69V	220-240/380-440	1.5	5.8-5.5/3.4-3.1	1.5	8.3-7.6/4.8-4.2	404	76	101	75	27
TPM18T2.5K(S)	3	69V	220-240/380-440	2.2	8.6-8.4/4.9-5.0	1.5	12.1-11.2/6.9-6.4	426	76	101	75	31
TPM18T4K(S)	3	69V	220-240/380-440	3.0	11.2-10.7/6.4-6.3	1.3	14.5-13.3/8.3-7.6	483	108	133	107	34

TPM 25T

Performance curve

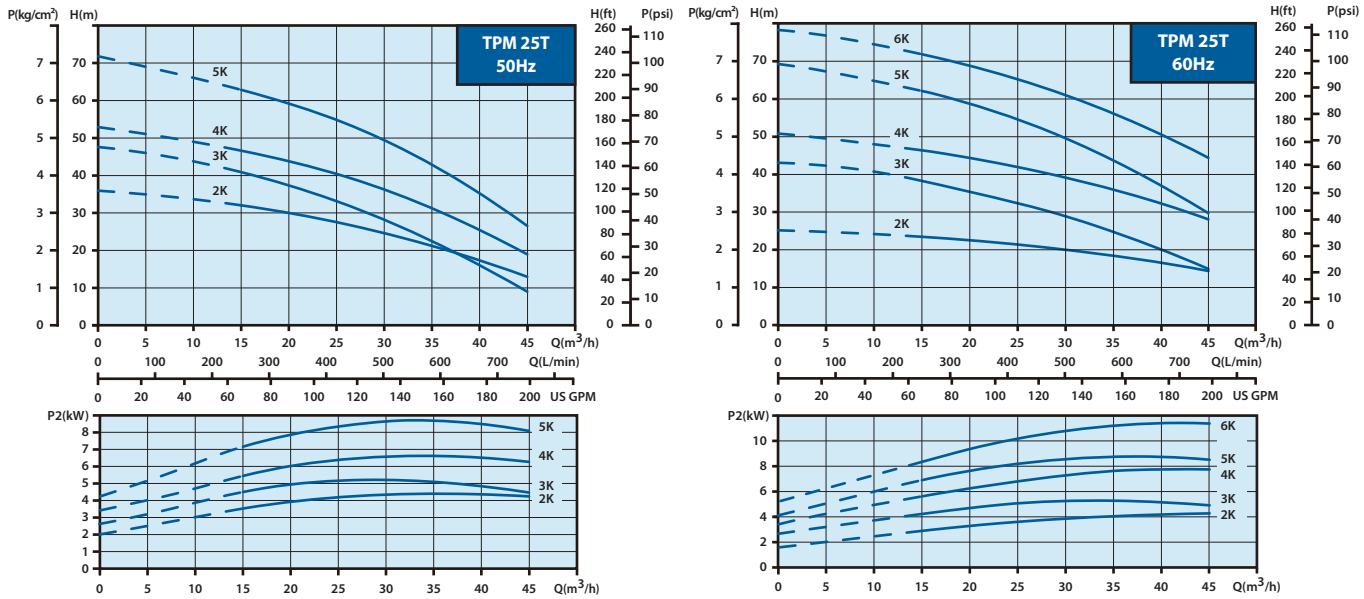

Electrical data

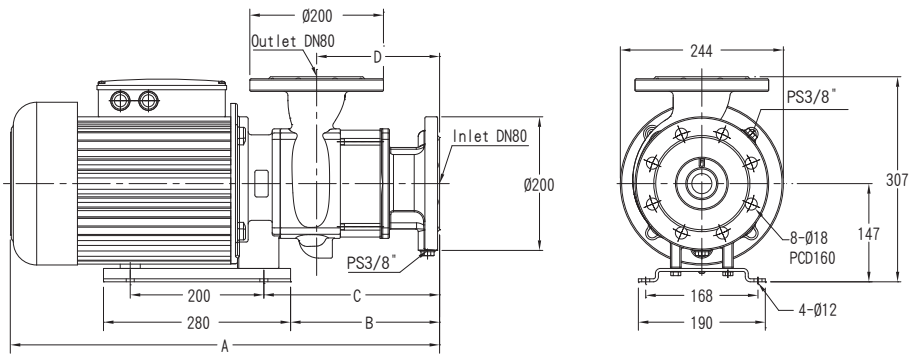

50Hz, 2900rpm, Motor Efficiency IE3

Model	PH (Ø)	Voltage code	Volts (V)	Output Power(kW)	Ampere I¹/₁(A)	Service Factor	Ampere Imax(A)	Dimensions				N.W. (kg)
								A(mm)	B(mm)	C(mm)	D(mm)	
TPM25T2.5K(N)F	3	59U	220-240/380-415	4	16.0-16.6/9.0-9.5	1.1	17.4-17.5/9.7-10.1	643	223	263	185	64.5
TPM25T3K(N)F	3	59U	220-240/380-415	5.5	19.6-19.9/11.3-11.4	1.1	21.3-21.2/12.3-12.2	703	283	323	245	71
TPM25T4K(N)F	3	59U	220-240/380-415	5.5	19.6-19.9/11.3-11.4	1.1	21.3-21.2/12.3-12.2	703	283	323	245	71
TPM25T5K(N)F	3	59U	220-240/380-415	7.5	25.0-24.8/14.6-14.5	1.1	27.3-26.8/15.9-15.7	803	343	383	305	82.5

60Hz, 3500rpm, Motor Efficiency IE3

Model	PH (Ø)	Voltage code	Volts (V)	Output Power(kW)	Ampere I¹/₁(A)	Service Factor	Ampere Imax(A)	Dimensions				N.W. (kg)
								A(mm)	B(mm)	C(mm)	D(mm)	
TPM25T2K(N)F	3	69U	220-255/380-440	4	14.6-14.7/8.5-8.5	1.15	16.5-16 .0/9.6-9.3	583	163	203	125	61.5
TPM25T3K(N)F	3	69U	220-255/380-440	4	14.6-14.7/8.5-8.5	1.15	16.5-16.0/9.6-9.3	643	223	263	185	64
TPM25T4K(N)F	3	69U	220-255/380-440	5.5	19.1-17.9/10.9-10.3	1.15	21.7-19.9/12.4-11.5	643	223	263	185	69
TPM25T5K(N)F	3	69U	220-255/380-440	7.5	25.4-24.4/14.7-14.1	1.15	28.9-27.1/16.7-15.8	743	283	323	245	80
TPM25T6K(N)F	3	69U	220-255/380-440	7.5	25.4-24.4/14.7-14.1	1.15	28.9-27.1/16.7-15.8	743	283	323	245	80

TPM 50T

Performance curve

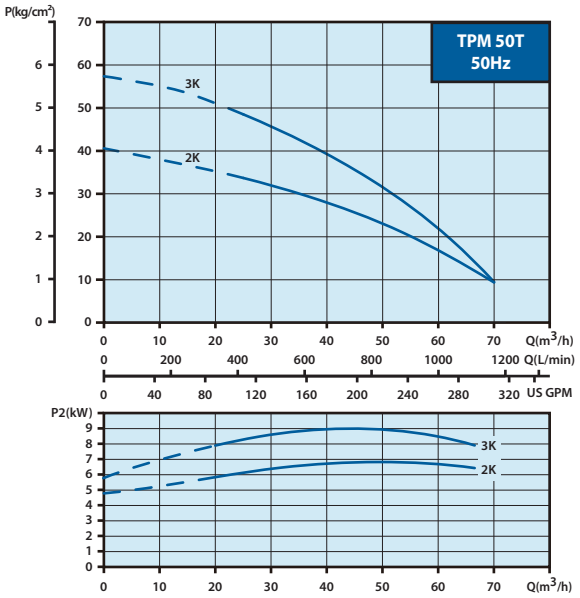

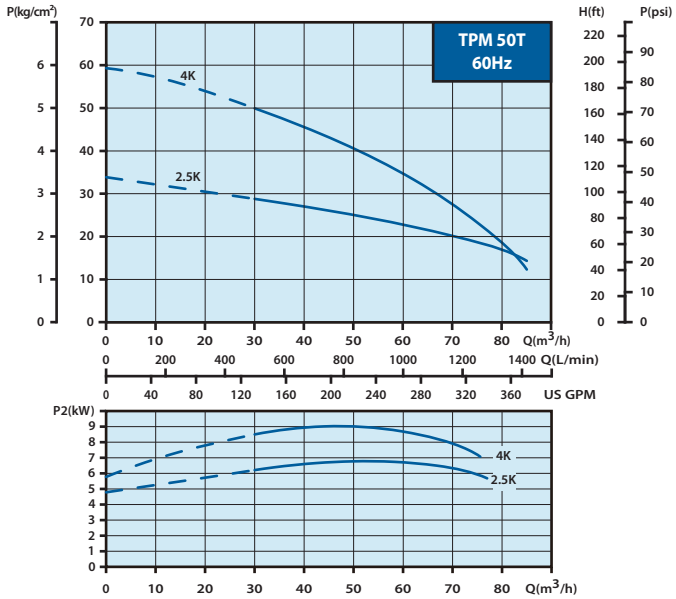

Electrical data

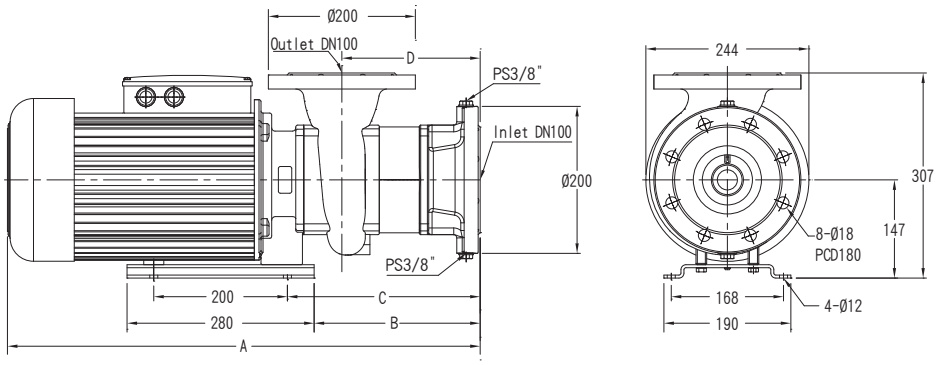

50Hz, 2900rpm, Motor Efficiency IE3

Model	PH (Ø)	Voltage code	Volts (V)	Output Power(kW)	Ampere I¹/₁(A)	Service Factor	Ampere Imax(A)	Dimensions				N.W. (kg)
								A(mm)	B(mm)	C(mm)	D(mm)	
TPM50T2K(N)F	3	59U	220-240/380-415	5.5	19.6-19.9/11.3-11.4	1.1	21.3-21.2/12.3-12.2	667	248	288	207	73
TPM50T3K(N)F	3	59U	220-240/380-415	7.5	25.0-24.8/14.6-14.5	1.1	27.3-26.8/15.9-15.7	767	308	348	267	84.5

60Hz, 3500rpm, Motor Efficiency IE3

Model	PH (Ø)	Voltage code	Volts (V)	Output Power(kW)	Ampere I¹/₁(A)	Service Factor	Ampere Imax(A)	Dimensions				N.W. (kg)
								A(mm)	B(mm)	C(mm)	D(mm)	
TPM50T2.5K(N)F	3	69U	220-255/380-440	5.5	19.1-17.9/10.9-10.3	1.15	21.7-19.9/12.4-11.5	607	188	228	147	71
TPM50T4K(N)F	3	69U	220-255/380-440	7.5	25.4-24.4/14.7-14.1	1.15	28.9-27.1/16.7-15.8	707	248	288	207	82

TPHK Series Immersible Pump

50Hz

Power: 0.37 - 3.4 kW

Head: Up to 65M

Flow: Up to 280 L/min

60Hz

Power: 0.37 - 3.7 kW

Head: Up to 90M

Flow: Up to 280 L/min

Outlet: ¾" -1¼"

Applications

The TPHK Series is vertical multistage centrifugal pump, designed for industrial use, specially for machine tools. It is suitable to carry fluids such as water, coolant, light oil and other clean, non aggressive matters:

- Industrial circulation system
- Washing/cleaning system
- Filtration system

Operating Conditions

1. Ambient temperature : Max. +40°C
2. Liquid temperature range : +0°C ~ +90°C
3. Operating pressure : Max. 10 kg/cm^2
4. Submerged depth : Min. 40mm

Model code

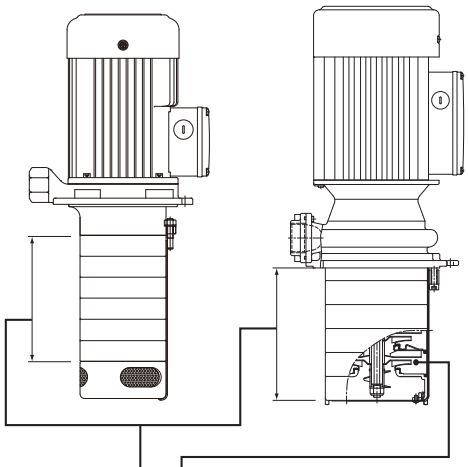

TPHK 2T 6 - 4 S

- **Stainless steel series**
- **Number of Impellers**
- **Number of Stages**
- **Standard capacity m^3/h**
- **Model name**

Pump Construction

Immersible vertical multistage centrifugal pump, self-priming, co-axial pump/motor design, impellers mounted on extended motor shaft. Main working parts made by stainless steel.

Motor

Enclosure class : IP54

Insulation class : F.

Nominal speed : 2900 / 3500 rpm

Frequency range : 50 / 60 Hz

Voltages Code :

Code	PH	50Hz	60Hz
A6V*	3	200-230/342-415V	220-240/380-480V
A9V*	3	200-230/342-380V	220-240/380-440V
59V	3	200-230/342-380V	-

* The motor can be use in both 50/60 Hz.

TPHK Series Immersible Pump

Performance curve (50Hz)

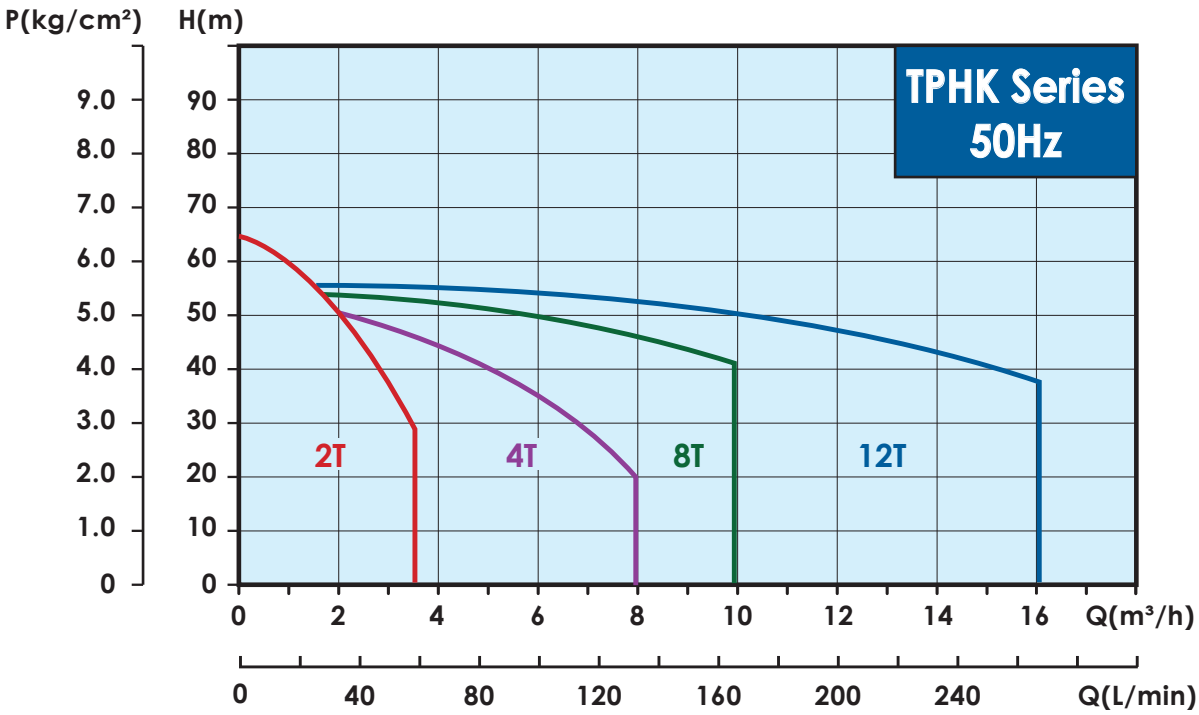

Performance curve (60Hz)

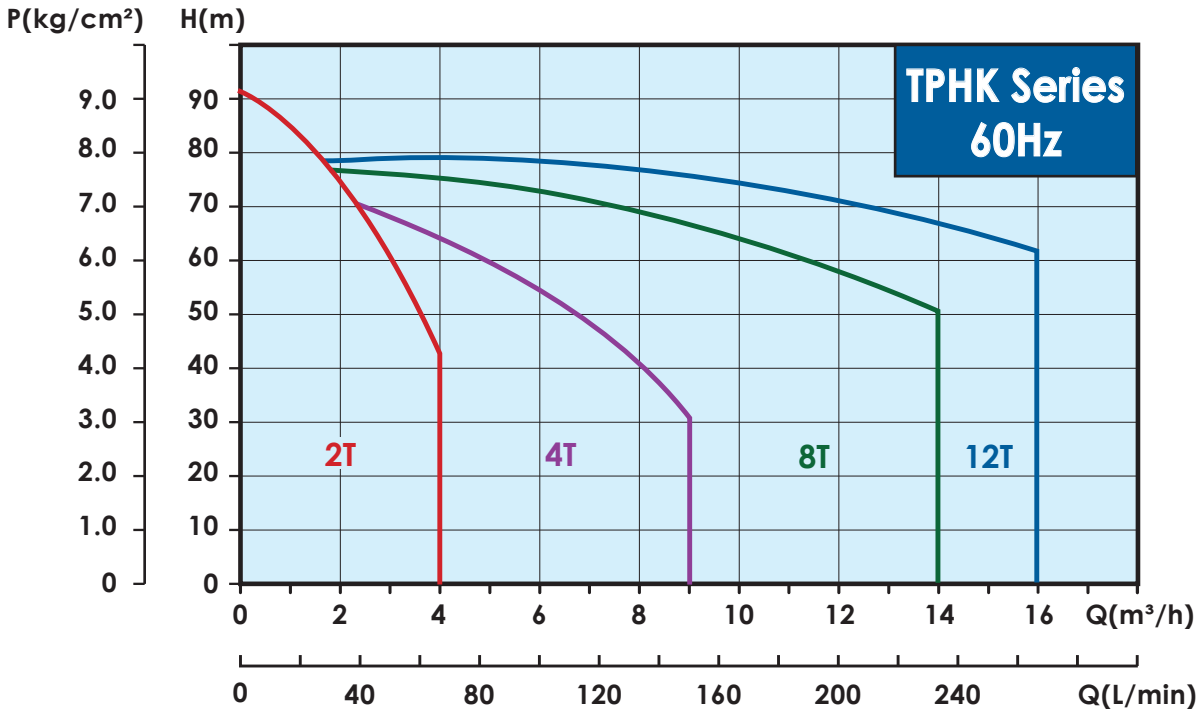

Sectional drawing

TPHK 2T/4T

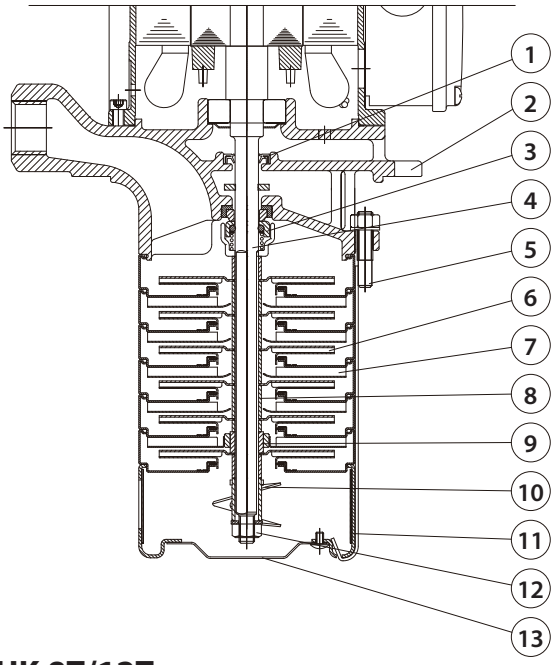

TPHK 8T/12T

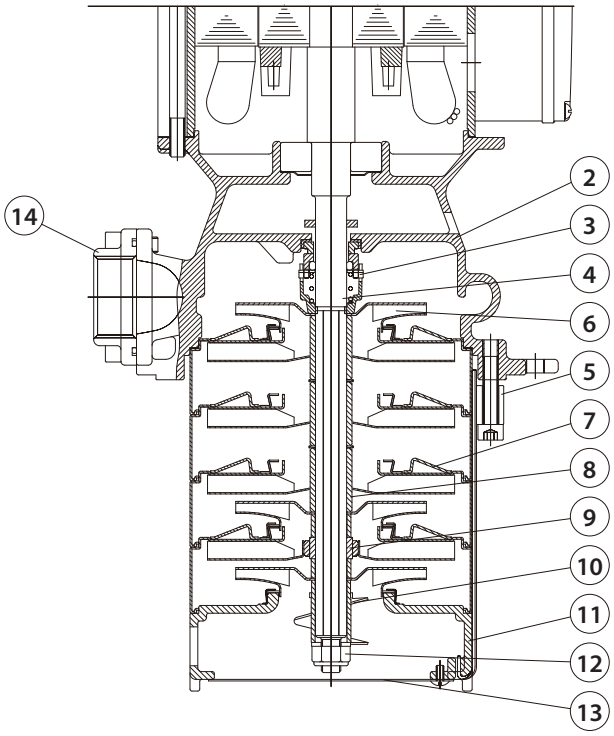

Materials

NO.	Part name	Material	
		Standard	S series
1	Oil Seal	MSSH/HSSH	MGSH/HGSH
2	Pump Casing	FCD 45	SUS 304
3	Mechanical Seal	HSSH	HGSH
4	Shaft	SUS 304	
5	Strap	SUS 304	
6	Impeller	SUS 304	
7	Intermediate chamber	SUS 304	
8	Sleeve	SUS 304	
9	Bearing	SiC	
10	Priming screw	SUS 304	
11	Suction intercon-nector	SUS 304	
12	Lock Nut	SUS 316	
13	Filter	SUS 304	
14	Flange	SUS 304	

SUS 304 may be replaced by SUS316 depended on stock availability.

Options on request

- Special mechanical seal

(TPH 2/4T)

Mechanical seal type	Material	
	Stationary Face/ Rotary Face	Cup Gasket & O Ring
MGSH MGSV MGSE	(G)Carbon/ (S)Silicium carbide	(H) HNBR (V) Viton (E) EPDM
MSSH MSSV MSSE	(S)Silicium carbide/ (S)Silicium carbide	

(TPH 8/12T)

Mechanical seal type	Material	
	Stationary Face/ Rotary Face	Cup Gasket & O Ring
HGSH HGSV HGSE	(G)Carbon/ (S)Silicium carbide	(H) HNBR (V) Viton (E) EPDM
HSSH HSSV HSSE	(S)Silicium carbide/ (S)Silicium carbide	

TPHK 2T

Electrical data, 50/60Hz

Model	PH (Ø)	Voltage code	Cycle (Hz)	Volts (V)	Output Power (kW)	Ampere $I^{1/1}$(A)	Service Factor	Service Factor I_{max}(A)
TPHK2T3-1	3	A6V	50	200-230/342-415V	0.37	1.8-1.9/1.1-1.2	1.2	2.1-2.1/1.2-1.3
			60	220-240/380-480V		1.7-1.7/1.1-1.1	1.6	2.4-2.3/1.4-1.3
TPHK2T3-2	3	A6V	50	200-230/342-415V	0.37	1.8-1.9/1.1-1.2	1.2	2.1-2.1/1.2-1.3
			60	220-240/380-480V		1.7-1.7/1.1-1.1	1.6	2.4-2.3/1.4-1.3
TPHK2T3-3	3	A6V	50	200-230/342-415V	0.37	1.8-1.9/1.1-1.2	1.2	2.1-2.1/1.2-1.3
			60	220-240/380-480V		1.7-1.7/1.1-1.1	1.6	2.4-2.3/1.4-1.3
TPHK2T4-4	3	A6V	50	200-230/342-415V	0.55	2.5-2.4/1.5-1.4	1.1	2.7-2.6/1.6-1.5
			60	220-240/380-480V		2.3-2.2/1.3-1.3	1.5	3.2-3.0/1.9-1.6
TPHK2T5-5	3	A6V	50	200-230/342-415V	0.75	3.5-3.6/2.0-2.2	1.1	3.8-3.8/2.2-2.3
			60	220-240/380-480V		3.1-3.1/1.8-1.9	1.4	4.1-3.9/2.3-2.3
TPHK2T6-6	3	A6V	50	200-230/342-415V	0.75	3.5-3.6/2.0-2.2	1.1	3.8-3.8/2.2-2.3
			60	220-240/380-480V		3.1-3.1/1.8-1.9	1.4	4.1-3.9/2.3-2.3
TPHK2T7-7	3	A6V	50	200-230/342-415V	1.1	5.2-5.4/3.1-3.4	1.1	5.5-5.7/3.3-3.5
			60	220-240/380-480V		4.6-4.6/2.8-3.1	1.4	6.2-5.7/3.6-3.5

Maximum 11 Stages

Dimensions (mm)

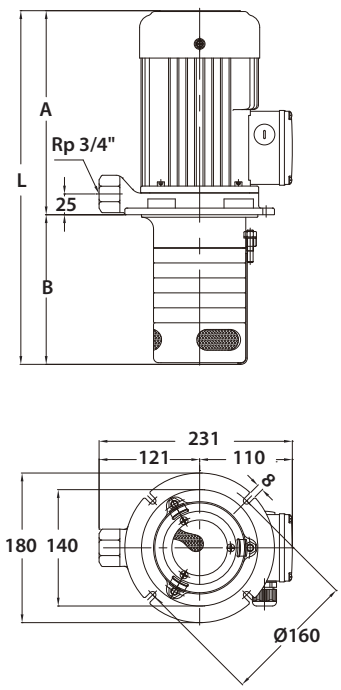

Model	A (mm)	B (mm)	L (mm)	N.W.(kg)	
TPHK 2T 3 -1**	205.5	144	349.5	10.9	30
TPHK 2T 8 -1**	205.5	234	439.5	11.9	30
TPHK 2T 3 -2**	205.5	144	349.5	11.1	30
TPHK 2T 5 -2**	205.5	180	385.5	11.5	30
TPHK 2T 9 -2**	205.5	252	457.5	12.3	30
TPHK 2T 3 -3**	205.5	144	349.5	11.2	30
TPHK 2T 4 -3**	205.5	162	367.5	11.4	30
TPHK 2T 5 -3**	205.5	180	385.5	11.6	30
TPHK 2T 6 -3**	205.5	198	403.5	11.8	30
TPHK 2T 8 -3**	205.5	234	439.5	12.2	30
TPHK 2T11-3**	205.5	288	493.5	12.6	24
TPHK 2T 4 -4**	245.5	162	407.5	11.5	30
TPHK 2T 6 -4**	245.5	198	443.5	11.9	30
TPHK 2T 5 -5	245.5	180	425.5	12.7	30
TPHK 2T 6 -5	245.5	198	443.5	13.3	30
TPHK 2T 6 -6	253.5	198	451.5	13.5	30
TPHK 2T 8 -6	253.5	234	487.5	13.9	30
TPHK 2T 9 -6	253.5	252	505.5	14.1	24
TPHK 2T10-6	253.5	270	523.5	14.2	24
TPHK 2T11-6	253.5	288	541.5	14.4	24
TPHK 2T 7 -7	284	216	500	13.0	30

** 0.37 - 0.55 kW (½ - ¾ HP) motors are not part of the IE2 classification

Performance curve (50Hz)

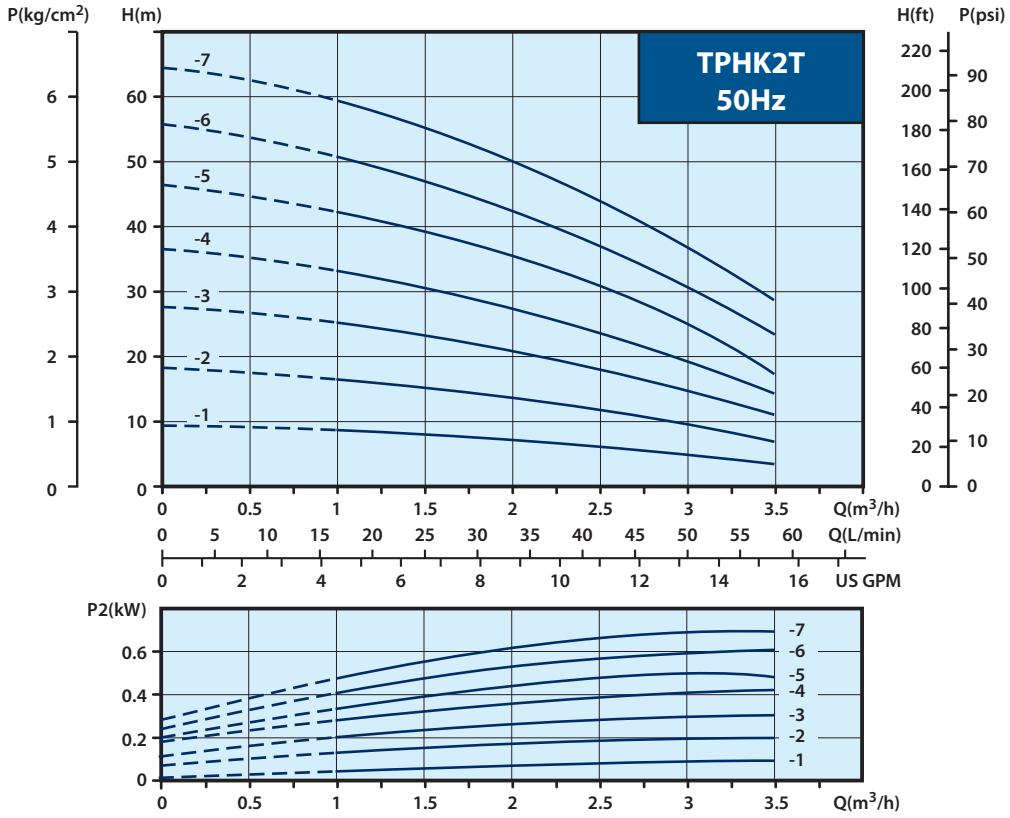

Performance curve (60Hz)

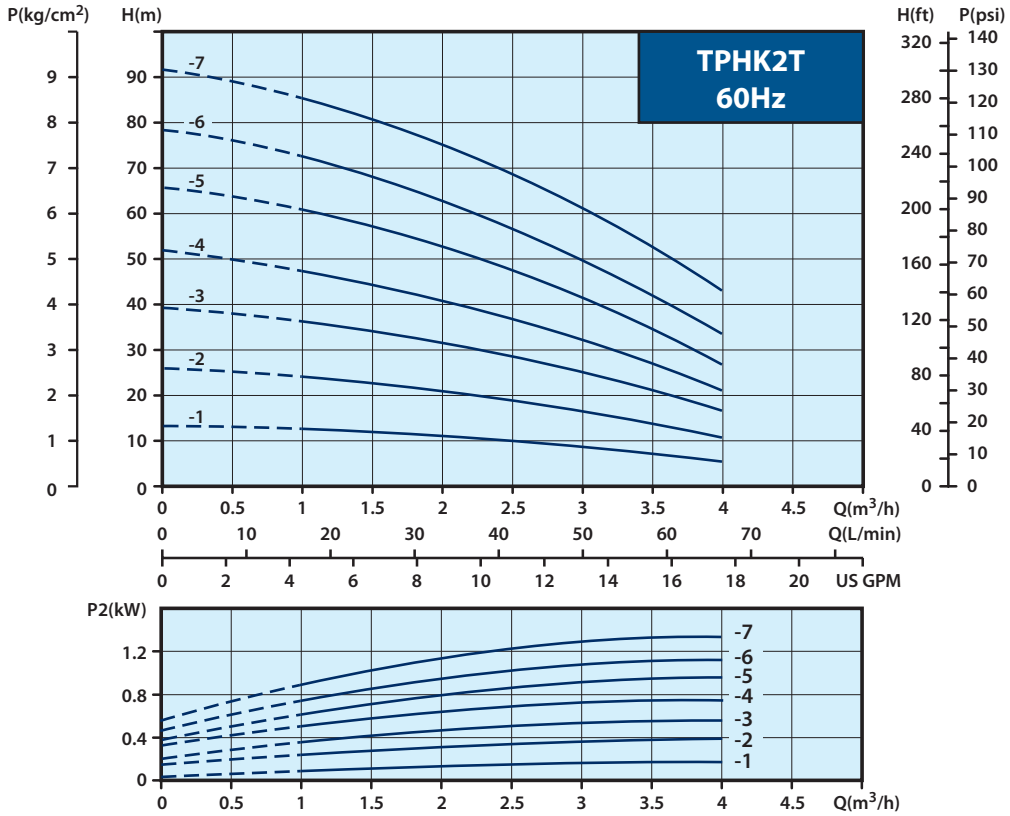

TPHK 4T

Electrical data, 50/60Hz

Model	PH (Ø)	Voltage code	Cycle (Hz)	Volts (V)	Output Power (kW)	Ampere $I^{1/1}$(A)	Service Factor	Service Factor I_{max}(A)
TPHK4T1-1	3	A6V	50	200-230/342-415V	0.37	1.8-1.9/1.1-1.2	1.2	2.1-2.1/1.2-1.3
			60	220-240/380-480V		1.7-1.7/1.1-1.1	1.6	2.4-2.3/1.4-1.3
TPHK4T2-2	3	A6V	50	200-230/342-415V	0.55	2.5-2.4/1.5-1.4	1.1	2.7-2.6/1.6-1.5
			60	220-240/380-480V		2.3-2.2/1.3-1.3	1.5	3.2-3.0/1.9-1.6
TPHK4T3-3	3	A6V	50	200-230/342-415V	0.75	3.5-3.6/2.0-2.2	1.1	3.8-3.8/2.2-2.3
			60	220-240/380-480V		3.1-3.1/1.8-1.9	1.4	4.1-3.9/2.3-2.3
TPHK4T4-4	3	A6V	50	200-230/342-415V	1.1	5.2-5.4/3.1-3.4	1.1	5.5-5.7/3.3-3.5
			60	220-240/380-480V		4.6-4.6/2.8-3.1	1.4	6.2-5.7/3.6-3.5
TPHK4T5-5	3	A6V	50	200-230/342-415V	1.5	6.7-6.7/3.8-4.0	1.1	7.3-7.1/4.1-4.2
			60	220-240/380-480V		6.0-5.9/3.5-3.6	1.4	8.1-7.6/4.7-4.2
TPHK4T6-6	3	A6V	50	200-230/342-415V	1.5	6.7-6.7/3.8-4.0	1.1	7.3-7.1/4.1-4.2
			60	220-240/380-480V		6.0-5.9/3.5-3.6	1.4	8.1-7.6/4.7-4.2

Maximum 8 Stages

Dimensions (mm)

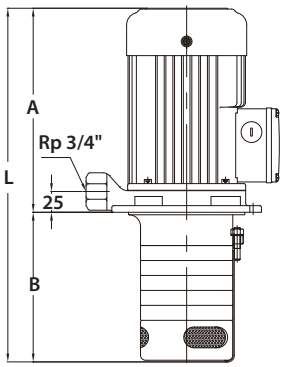

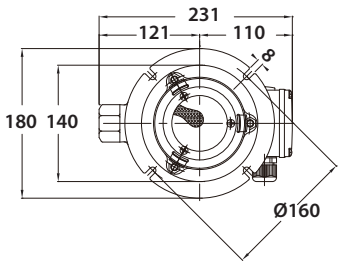

Model	A (mm)	B (mm)	L (mm)	N.W.(kg)	
TPHK 4T 2 -1	205.5	144	349.5	10.8	30
TPHK 4T 3 -1	205.5	171	376.5	11.0	30
TPHK 4T 2 -2	245.5	144	389.5	11.0	30
TPHK 4T 3 -2	245.5	171	416.5	11.2	30
TPHK 4T 4 -2	245.5	198	443.5	11.4	30
TPHK 4T 6 -2	245.5	252	497.5	11.6	24
TPHK 4T 3 -3	245.5	171	416.5	11.7	30
TPHK 4T 4 -3	245.5	198	443.5	11.9	30
TPHK 4T 5 -3	245.5	225	470.5	12.1	30
TPHK 4T 6 -3	245.5	252	497.5	12.3	24
TPHK 4T 8 -3	245.5	306	551.5	12.7	24
TPHK 4T 4 -4	284	198	482	13.3	30
TPHK 4T 5 -4	284	225	509	13.5	30
TPHK 4T 6 -4	284	252	536	13.7	24
TPHK 4T 5 -5	309	225	534	13.9	30
TPHK 4T 8 -5	309	306	615	14.5	24
TPHK 4T 6 -6	309	252	561	14.1	24
TPHK 4T 8 -6	309	306	615	14.6	24

Performance curve (50Hz)

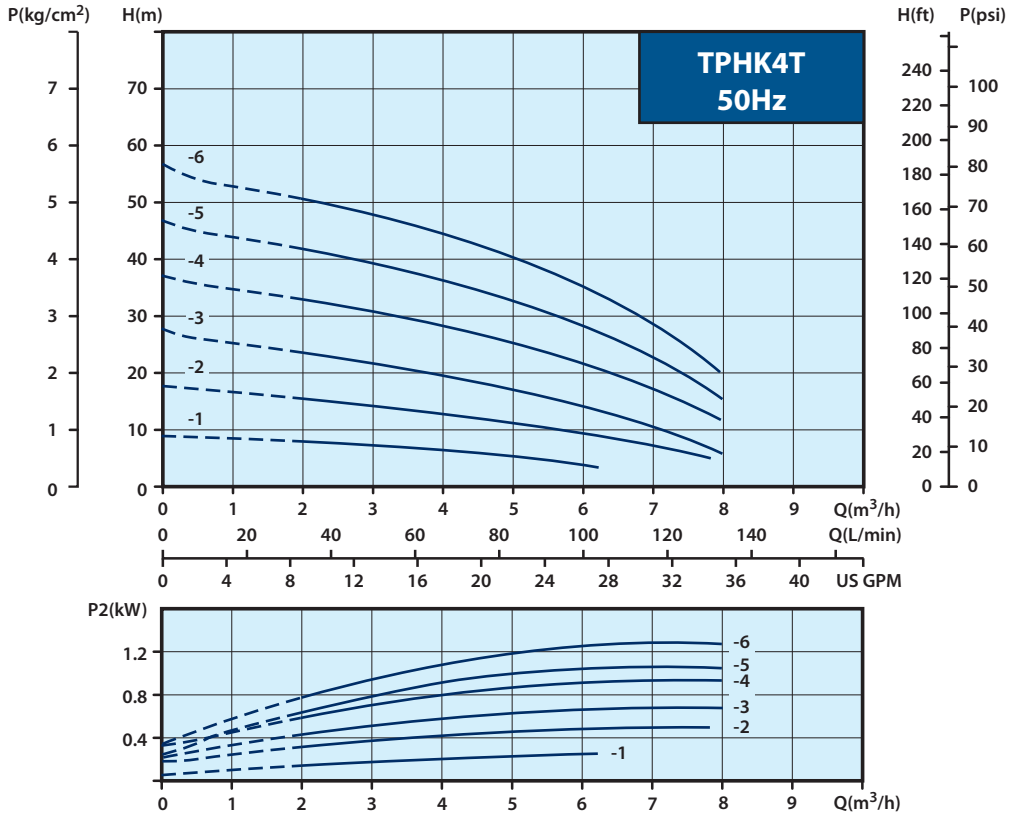

Performance curve (60Hz)

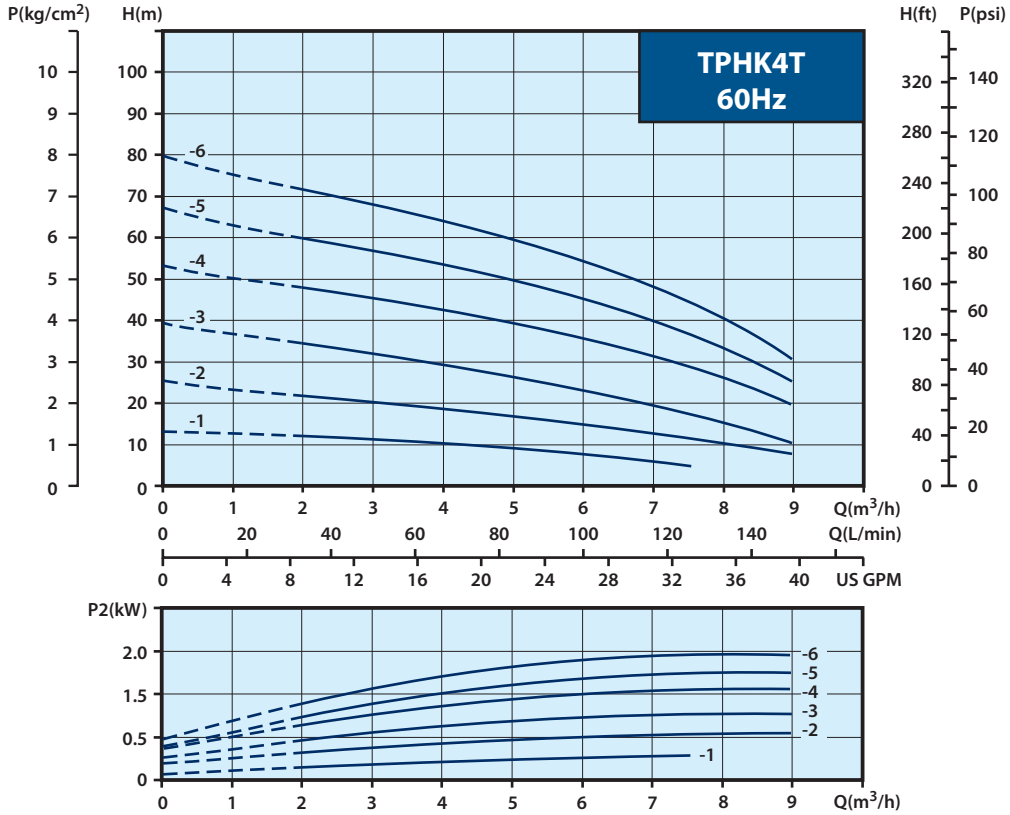

TPHK 8T

Electrical data, 50/60Hz

Model	PH (Ø)	Voltage code	Cycle (Hz)	Volts (V)	Output Power (kW)	Ampere $I^{1/1}$(A)	Service Factor	Service Factor I_{max}(A)
TPHK8T6-2	3	A9V	50	200-230/342-380V	1.1	5.2-6.0/3.0-3.2	1.1	5.5-6.2/3.2-3.3
			60	220-240/380-440V		4.8-4.7/2.8-2.9	1.5	6.0-5.8/3.5-3.4
TPHK8T3-3	3	A9V	50	200-230/342-380V	1.5	6.3-6.1/3.6-3.5	1.1	6.8-6.5/3.9-3.7
			60	220-240/380-440V		5.8-5.5/3.4-3.1	1.5	8.3-7.6/4.8-4.2
TPHK8T4-4	3	A9V	50	200-230/342-380V	3.0	12.2-13.1/7.1-7.1	1.1	13.4-14.0/7.9-7.8
			60	220-240/380-440V		11.2-10.7/6.4-6.3	1.3	14.5-13.3/8.3-7.6
TPHK8T5-5	3	A9V	50	200-230/342-380V	3.4	13.4-13.0/7.8-7.4	1.1	14.6-13.9/8.5-8.0
			60	220-240/380-440V	3.7	13.4-12.6/7.7-7.0	1.25	16.4-15.1/9.4-8.4

Dimensions (mm)

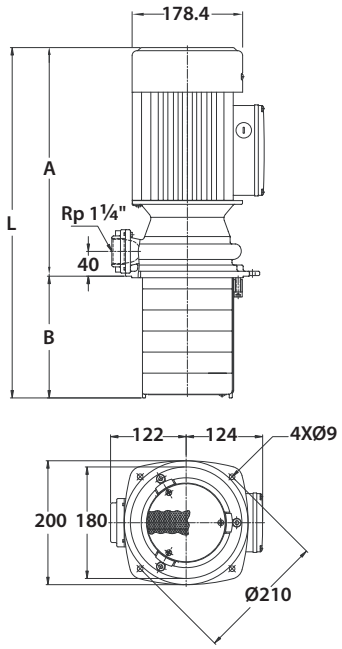

Model	A (mm)	B (mm)	L (mm)	N.W.(kg)	
TPHK 8T 6 -2	369	196.5	565.5	24.0	15
TPHK 8T 9 -2	369	298.5	667.5	25.3	15
TPHK 8T 3 -3	369	94.5	463.5	23.0	15
TPHK 8T 6 -3	369	196.5	565.5	24.3	15
TPHK 8T 9 -3	369	298.5	667.5	25.6	15
TPHK 8T 4 -4	416	128.5	544.5	27.0	15
TPHK 8T 6 -4	416	196.5	612.5	28.0	15
TPHK 8T 5 -5	436	162.5	598.5	28.0	15

Performance curve (50Hz)

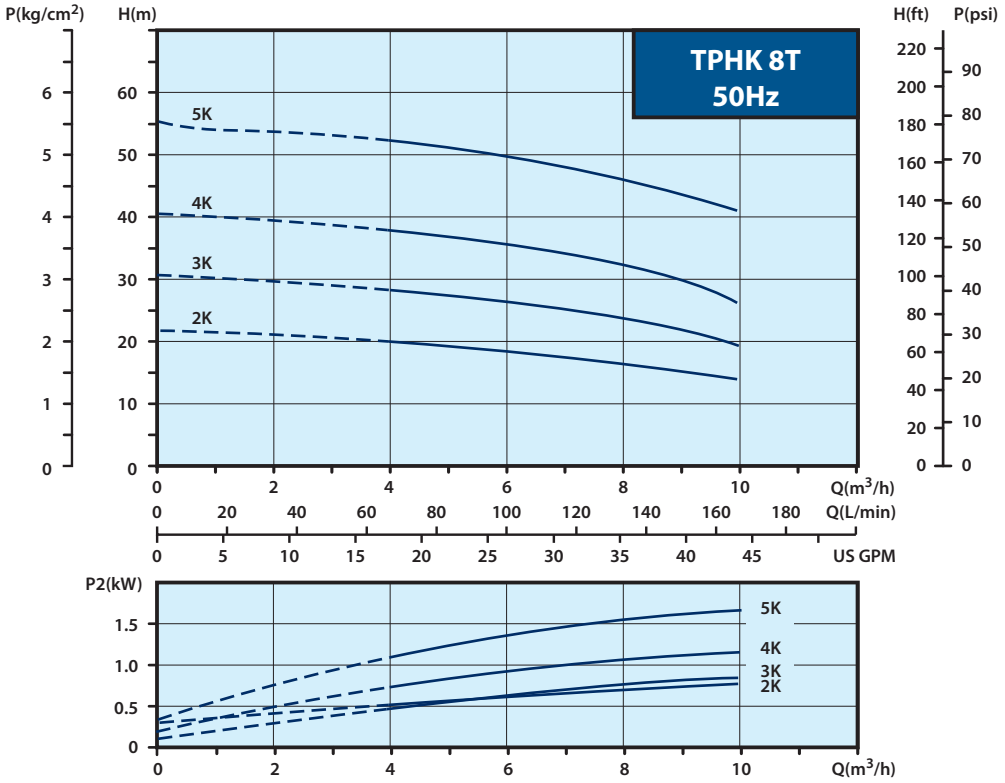

Performance curve (60Hz)

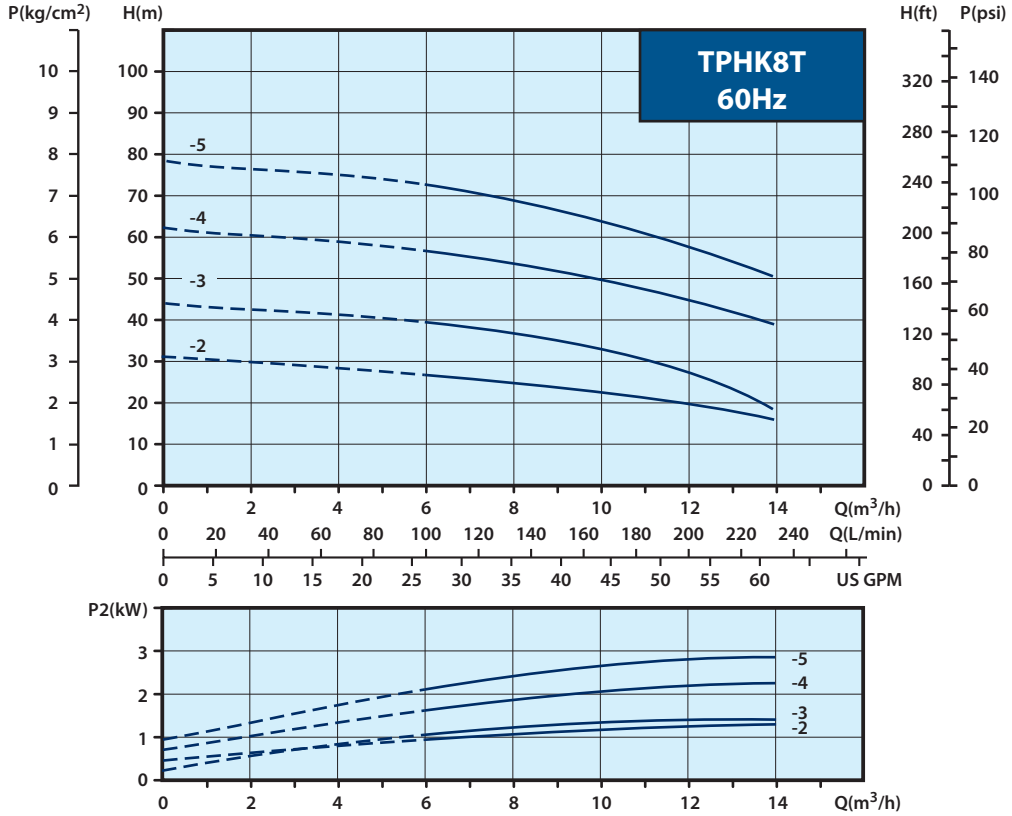

TPHK 12T

Electrical data, 50/60Hz

Model	PH (Ø)	Voltage code	Cycle (Hz)	Volts (V)	Output Power (kW)	Ampere $I^{1}/_{1}$(A)	Service Factor	Service Factor I_{max}(A)
TPHK12T6-1	3	A9V	50	200-230/342-380V	1.5	6.3-6.1/3.6-3.5	1.1	6.8-6.5/3.9-3.7
			60	220-240/380-440V		5.8-5.5/3.4-3.1	1.5	8.3-7.6/4.8-4.2
TPHK12T6-2	3	A9V	50	200-230/342-380V	3.4	13.4-13.0/7.8-7.4	1.1	14.6-13.9/8.5-8.0
			60	220-240/380-440V	3.7	13.4-12.6/7.7-7.0	1.25	16.4-15.1/9.4-8.4
TPHK12T6-3	3	59V	50	200-230/342-380V	3.4	13.4-13.0/7.8-7.4	1.1	14.6-13.9/8.5-8.0

Dimensions (mm)

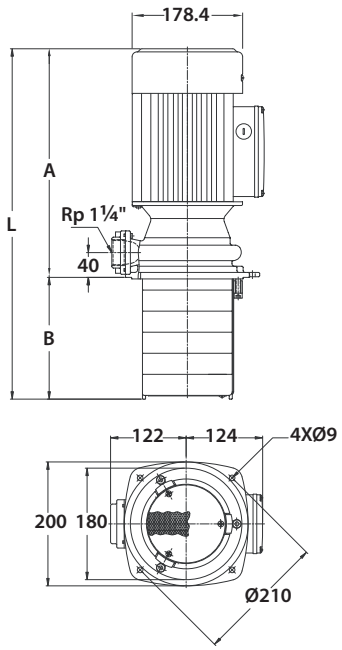

Model	A (mm)	B (mm)	L (mm)	N.W.(kg)	
TPHK12T 6 -1	369	196.5	565.5	27.0	15
TPHK12T 6 -2	436	196.5	632.5	29.0	15
TPHK12T 9 -2	436	298.5	734.5	30.5	15
TPHK12T 6 -3	436	196.5	632.5	30.0	15
TPHK12T 9 -3	436	298.5	734.5	31.5	15

Performance curve (50Hz)

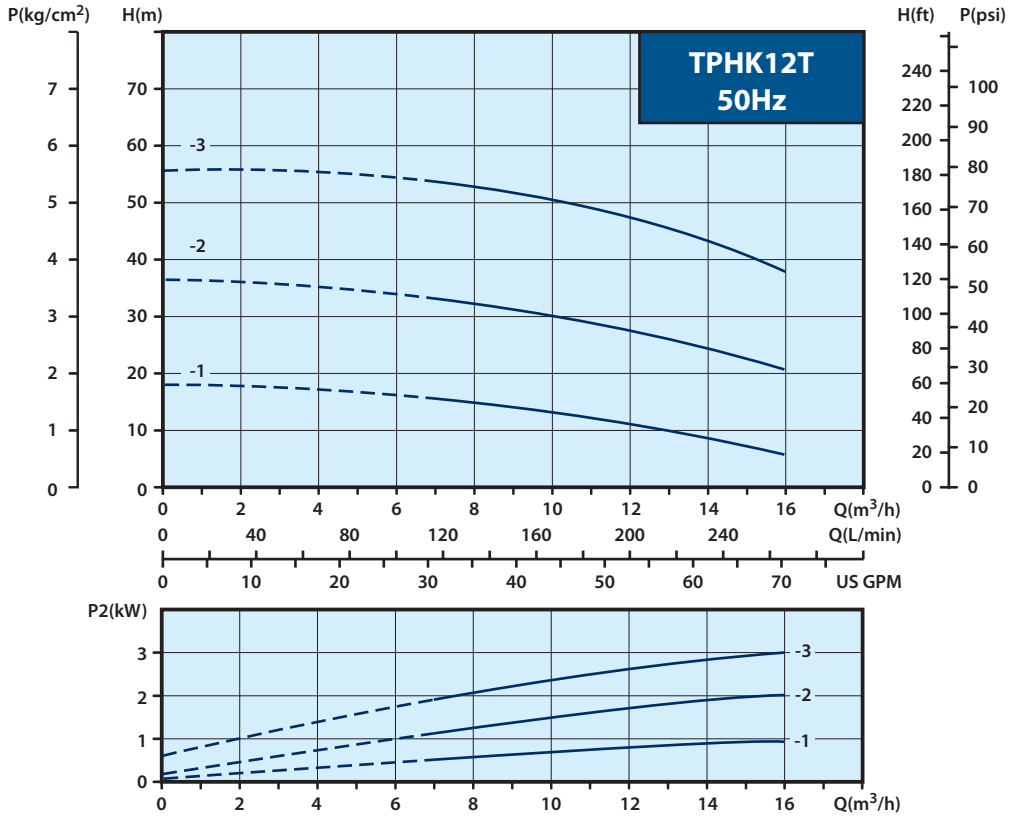

Performance curve (60Hz)

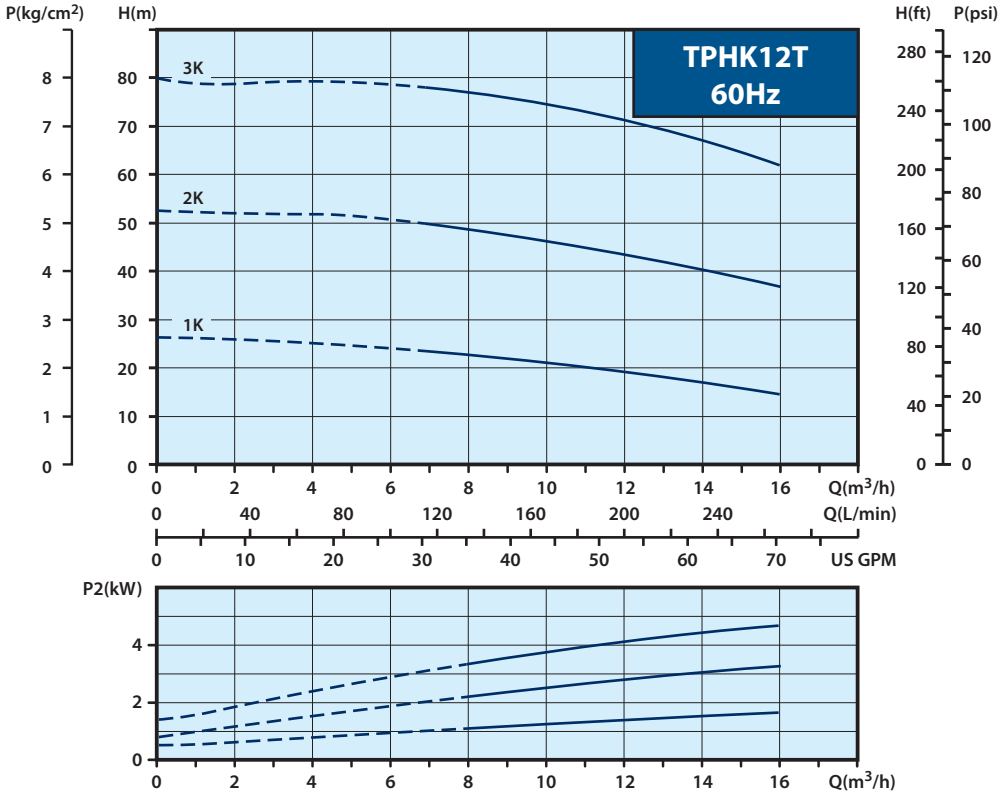

TPHK(S)E Series Immersible Pump

50Hz

Power: 1.1 - 3.4 kW

Head: Up to 60M

Flow: Up to 200 L/min

60Hz

Power: 1.1 - 3.7 kW

Head: Up to 86M

Flow: Up to 230 L/min

Applications

The TPHK8T(S)E is vertical multistage centrifugal pump, designed for industrial use, specially for machine tool. It is suitable to carry fluids such as water, coolant, light oil and other clean, non aggressive matters:

-Industrial circulation system
-Washing/cleaning system
-Filtration system

Operating conditions

Ambient temperature：Max. +40℃
Liquid temperature：+0℃ ~ +90℃
Operating pressure：Max.10kg/cm²
Submerged depth：Min. 40mm

Product feature

Immersible vertical multistage centrifugal pump, self-priming, co-axial pump/motor design, impellers mounted on extended motor shaft. Main working parts made by stainless steel.
Enclosure protection class：IP54
Insulation class：F.

Standard Mode

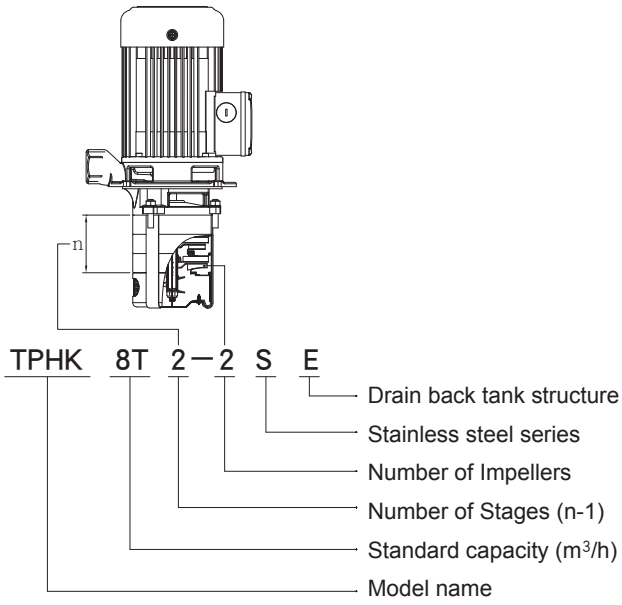

Materials

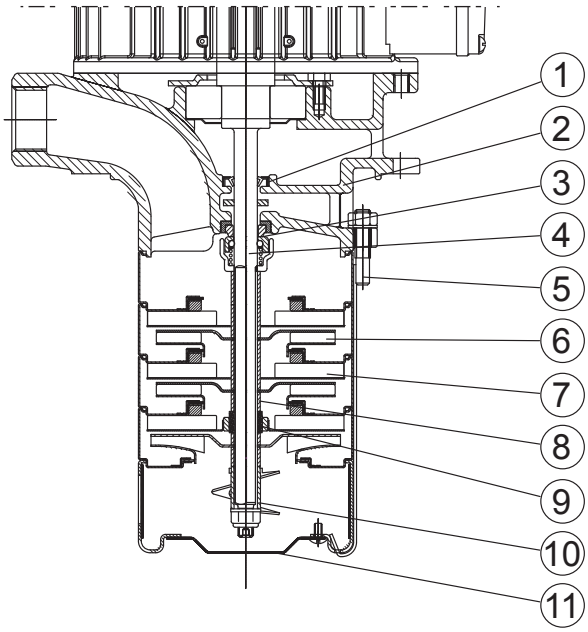

NO	Part name	Material	
		Standard	S series
1	Oil seal	NBR	
2	Pump Casing	FC 20	SUS 304
3	Mechanical seal	MSSH / MGSH	
4	Shaft	SUS 304	
5	Strap	SUS 304	
6	Impeller	SUS 304	
7	Intermediate Chamber	SUS 304	
8	Sleeve	SUS 304	
9	Bearing	SiC	
10	Priming screw	SUS 304	
11	Suction intercon-nector	SUS 304	

SUS 304 may be replaced by SUS316 depended on stock availability.

Options on request

- Special mechanical seal

Mechanical seal type	Material	
	Stationary Face / Rotary Face	Cup Gasket / O Ring
HGSH HGSV HGSE	(G)Carbon (S)Silicium Carbide	(H)HNBR (V)Viton (E)EPDM
HSSH HSSV HSSE	(S)Silicium Carbide (S)Silicium Carbide	

TPHK(S)E

Electrical data, 50Hz

Model	PH (Ø)	Voltage code	Cycle (Hz)	Volts (V)	P2 (kW)	Amper I 1/1 (A)	Service Factor	Amper I max (A)
TPHK8T2-2(S)E	3	A6V	50	200-230/342-415	1.1	5.2-5.4/3.1-3.4	1.1	5.5-5.7/3.3-3.5
TPHK8T3-3(S)E	3	A9V	50	200-230/342-380	2.2	9.5-10.5/5.5-5.6	1.1	10.2-10.9/5.9-5.9
TPHK8T4-4(S)E	3	A9V	50	200-230/342-380	2.2	9.5-10.5/5.5-5.6	1.1	10.2-10.9/5.9-5.9
TPHK8T5-5(S)E	3	A9V	50	200-230/342-380	3.0	12.2-13.1/7.1-7.1	1.1	13.4-14.0/7.9-7.8
TPHK8T6-6(S)E	3	A9V	50	200-230/342-380	3.4	13.4-13.0/7.8-7.4	1.1	14.6-13.9/8.5-8.0

Electrical data, 60Hz

Model	PH (Ø)	Voltage code	Cycle (Hz)	Volts (V)	P2 (kW)	Amper I 1/1 (A)	Service Factor	Amper I max (A)
TPHK8T2-2(S)E	3	A6V	60	220-240/380-480	1.1	4.6-4.6/2.8-3.1	1.4	6.2-5.7/3.6-3.5
TPHK8T3-3(S)E	3	A9V	60	220-240/380-440	2.2	8.6-8.4/4.9-5.0	1.5	12.1-11.2/6.9-6.4
TPHK8T4-4(S)E	3	A9V	60	220-240/380-440	2.2	8.6-8.4/4.9-5.0	1.5	12.1-11.2/6.9-6.4
TPHK8T5-5(S)E	3	A9V	60	220-240/380-440	3.0	11.2-10.7/6.4-6.3	1.3	14.5-13.3/8.3-7.6
TPHK8T6-6(S)E	3	A9V	60	220-240/380-440	3.7	13.4-12.6/7.7-7.0	1.3	16.4-15.1/9.4-8.4

Dimensions (mm)

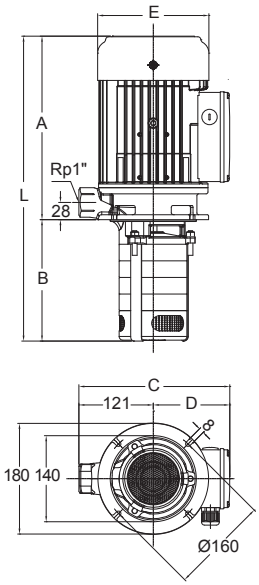

Model	Cycle (Hz)	Dimensions (mm)						N.W. (kg)
		L	A	B	C	D	E	
TPHK8T2-2(S)E	50 / 60	455	284	171	231	110	145	17
TPHK8T3-3(S)E	50 / 60	519	321	198	244	123	181	24
TPHK8T4-4(S)E	50 / 60	546	321	225	244	123	181	25
TPHK8T5-5(S)E	50 / 60	598	346	252	244	123	181	28
TPHK8T6-6(S)E	50 / 60	645	366	279	244	123	181	31

Performance curve (50Hz)

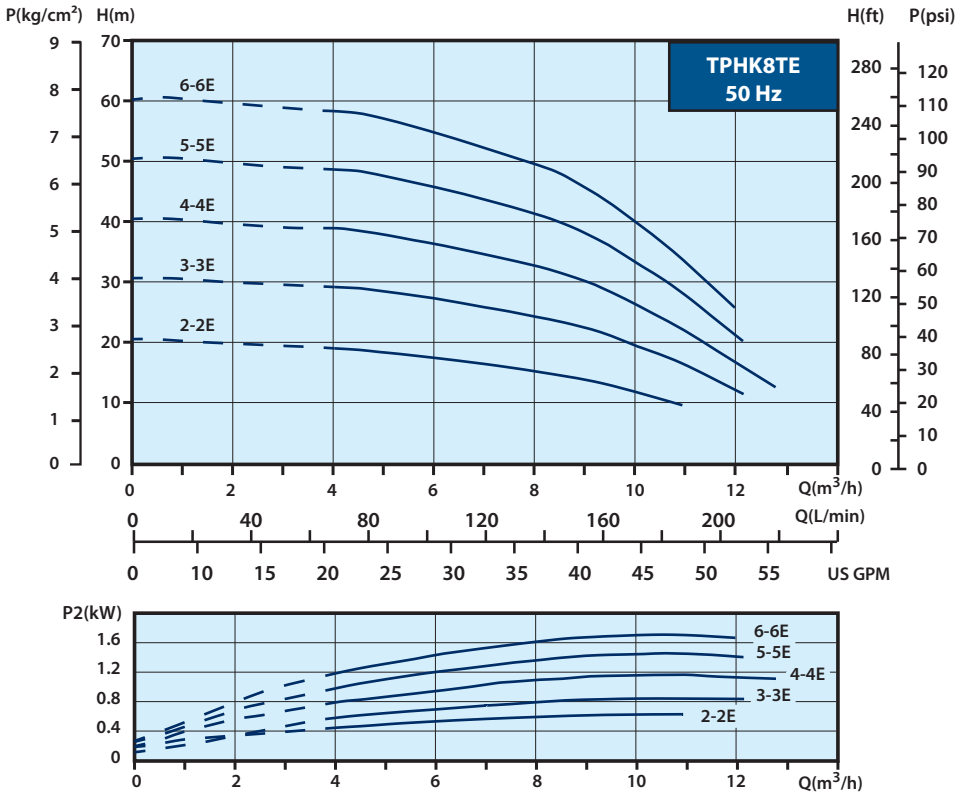

Performance curve (60Hz)

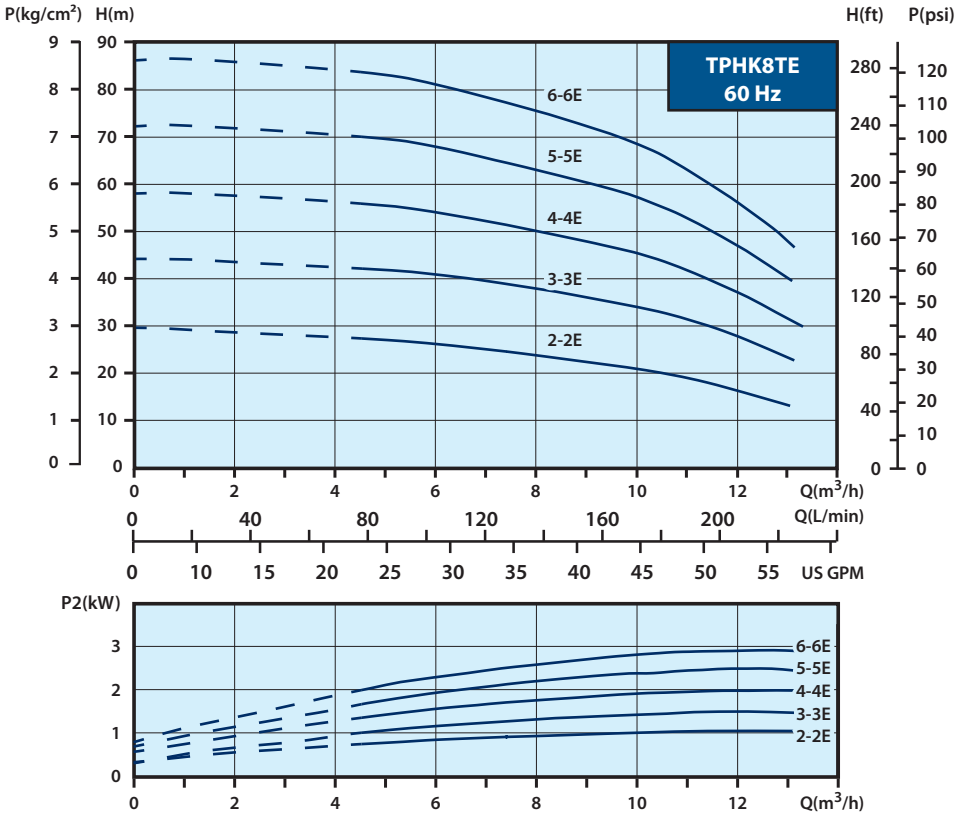

MEMO

WALRUS

WALRUS PUMP CO., LTD.

Head office: No.83-14, Dapiantou, Sanzhi Dist,
New Taipei City 252, Taiwan
Tel : (+886) 2 2636-1123~7
Fax : (+886) 2 8635-2660
Email: walrus.sales@walrus.com.tw

Web: www.walruspump.com

All specifications are subject to change without notice. IE3IE4-EW003-202005